Electrical Operating & Maintenance Manual

Example Car Workshop Centre

Unit 2, Example Park, Exampletown EX4 2WS

SAMPLE

Item	Details
Client	Example Holdings
Electrical Contractor	Demo Contracting Ltd
Project Reference	DC-2026-007
Document Date	12 June 2026

Contents

Section	Title
1	Scope
2	System Description
3	Maintenance
4	Manufacturer Product Data Sheets
5	Test & Commissioning Certificates
6	As-Built Drawings

SAMPLE

1. Scope

This Operating & Maintenance Manual has been prepared for the works associated with Example Car Workshop Centre at Unit 2, Example Park, Exampletown EX4 2WS. The document is intended to provide the client, facilities team and maintenance contractors with a summary of the systems installed, product literature, routine maintenance requirements, commissioning records and record drawing information.

The project works generally comprise the supply, installation, modification and commissioning of the following services:

- New electrical installation
- New emergency lighting installation
- Temporary power for welfare
- Fire detection and alarm system installation
- Chlorination of domestic cold water services
- Installation of lighting, small power, AC, ventilation, and data systems

SAMPLE

2. System Description

LV Distribution

The low voltage distribution installation at Unit 2 Example Park serves the lighting, small power, air conditioning, ventilation and data systems throughout the Example Car Workshop Centre. Distribution boards comprise the Hager JK112BG 125A 12-way TPN distribution board and the Hager KLDS10 10-way lighting distribution unit, installed in accordance with BS 7671 (IET Wiring Regulations) and BS EN 61439. Local isolation is provided by STAG IS4P125 IP65 enclosed 4-pole rotary isolators where required. Submain and final circuit cabling is supported on the containment systems described in the containment section. The installation was certified under an Electrical Installation Certificate to BS 7671 by the installer on 29/07/2022 with a satisfactory result, with temporary power for welfare previously certified on 29/04/2022. Refer to the coordinated layout drawings EX-101-CO-GF-01-RA and EX-101-CO-FF-01-RA for the distribution arrangement; circuit schedules are contained within the electrical installation certificate.

General Lighting

General lighting throughout the workshop centre is provided by a range of luminaires selected to suit each area. Internal commercial areas are served by Collingwood P2A19S30W 600x600 30W LED panels and Collingwood CDL0116M 16W and CDL0124M 24W commercial downlights, with JCC JC71743 5ft single LED battens and JCC single-circuit track sections (JC14003BLK), live ends (JC14009BLK) and JC14032BLK track spotlights used for accent and display lighting. The workshop and high-bay areas utilise Collingwood LB15040 150W linear low bay luminaires, while wet and external areas use Collingwood AC5SS40 5ft single anti-corrosive LED fittings and WL9527ECSB IP65 colour-switchable bulkheads. Luminaires are arranged to achieve the design illuminance levels in BS EN 12464-1 for the relevant task areas. Lighting circuits are distributed from the Hager KLDS10 lighting distribution unit and protected in accordance with BS 7671. Refer to drawings EX-101-EL-GF-01-RA and EX-101-EL-FF-01-RA for luminaire layouts and circuit allocations.

Lighting Controls

Lighting throughout the workshop centre is controlled by a combination of local switching and automatic presence detection. Manual switching is provided by British General metal-clad 10AX 2-way switches in single (MC512), double (MC542) and triple (MC543) gang configurations. Automatic control is provided by CP Electronics GEFL-IP flush ceiling-mounted PIR presence detectors to suitable areas, with Hager P64AX 4-pin plugs used for luminaire connection. The arrangement supports compliance with the automatic lighting control requirements of Building Regulations Part L. Refer to drawings EX-101-EL-GF-01-RA and EX-101-EL-FF-01-RA for sensor locations and control zoning.

Small Power

Small power throughout the workshop centre is provided via 13A BS 1363 socket outlets and associated accessories. Internal accessories comprise British General metal-clad 13A single switched (MC521), double switched (MC522), single unswitched (MC523) and double unswitched (MC524) socket outlets, together with British General MC550F 13A fused connection units. Hager WMSS82 2-gang double pole switched sockets and WMSSU83 13A switched fused connection units are also installed. External and wash-down areas are served by British General WP22 2-gang IP66 switched socket outlets. Floor-level power and data are provided by Tass TFB3/80 3-compartment cavity floor boxes. Final circuits are arranged as ring or radial circuits protected in accordance with BS 7671. Refer to drawings EX-101-EL-GF-02-RA and EX-101-EL-FF-02-RA for socket outlet layouts and circuit schedules.

SAMPLE

Emergency Lighting

Emergency lighting is provided by self-contained luminaires located to illuminate escape routes, open areas and final exits in accordance with BS 5266-1 and BS EN 1838. The system was tested and certified under an Emergency Lighting Completion Certificate by the installer on 05/08/2022 with a satisfactory result. Refer to the lighting layout drawings EX-101-EL-GF-01-RA and EX-101-EL-FF-01-RA for luminaire locations and designated escape routes. The rated duration and operating mode (maintained or non-maintained) should be confirmed against the emergency lighting design documentation and test certificate.

Fire Alarm

The fire detection and alarm system was installed by the electrical contractor and commissioned by a specialist, with a Fire Detection and Alarm System Commissioning Certificate issued to BS 5839-1:2017 on 29/07/2022 with a satisfactory result. The system comprises a control and indicating equipment (CIE) panel together with detection devices, manual call points and sounders as set out in the design. Refer to drawings EX-101-FA-GF-01-RA and EX-101-FA-FF-01-RA for zone plans and device layouts. The system category, panel manufacturer/model, number of zones and any monitoring arrangement should be confirmed from the commissioning certificate and zone plan documentation.

Containment / Cable Management

Cable containment comprises Legrand MGR422C steel surface trunking installed to support power, data and lighting cabling throughout the workshop centre. Containment is segregated in accordance with BS 7671 to maintain separation between Band I and Band II circuits. Fire-rated penetration seals are provided where containment passes through fire-rated walls and floors to maintain compartmentation. Refer to the coordinated layout drawings EX-101-CO-GF-01-RA and EX-101-CO-FF-01-RA for containment routes.

SAMPLE

3. Maintenance

Item	Frequency	Task
Distribution boards	Annually	Inspect for signs of overheating, loose connections, damage to enclosures and labelling. Verify door interlocks and IP ratings remain intact. Carry out a thermographic survey of all connections and busbars.
Main switchgear / incomer	Annually	Visually inspect for damage, corrosion or signs of overheating. Check tightness of all bolted connections and verify correct operation of isolators and circuit breakers.
RCDs and other protective devices	Every 6 months	Test RCD operation using the integral test button and record results in the maintenance log.
Distribution installation	Every 5 years (or per EICR cycle)	Carry out an Electrical Installation Condition Report (EICR) in accordance with BS 7671 to verify the continued safety of the installation.
Luminaires	Annually	Clean diffusers and light-emitting surfaces. Check for discolouration, cracking or water ingress. Replace failed lamps, LED modules or drivers as required.
Light fitting fixings and suspensions	Annually	Check security of fixings and suspension systems and tighten or replace as necessary.
Local switches and controls	Annually	Check operation of all local switches and confirm correct circuit allocation against the lighting drawings.
Lighting circuits	Every 5 years (or per EICR cycle)	Inspect and test lighting circuits as part of the periodic EICR.
Presence / absence detectors	Annually	Check detector operation, time-out settings and sensitivity. Clean lenses and recalibrate where room layout or furniture has changed.
Manual override controls	Annually	Confirm manual override and scene-setting controls operate correctly and revert to automatic control as designed.
Socket outlets and accessories	Annually	Visually inspect socket outlets, switches and accessories for damage, scorching or loose mounting. Replace faulty accessories.
Small power circuits	Every 5 years (or per EICR cycle)	Test and inspect small power circuits as part of the periodic EICR, including ring continuity checks where applicable.
RCD protection	Every 6 months	Test RCD-protected small power circuits using the integral test button and record results.
Floor boxes and power tracks	Annually	Check security, lid seals and labelling of floor-mounted outlets and confirm circuit identification remains legible.
Emergency luminaires	Monthly	Carry out a brief functional test of each luminaire to confirm it illuminates correctly on loss of supply, in accordance with BS 5266-1.

SAMPLE

Item	Frequency	Task
Emergency lighting system	Annually	Carry out a full duration discharge test of all emergency luminaires, confirm correct duration and illuminance is maintained, and recharge before returning to service.
Test logbook	Ongoing	Record all monthly and annual test results in the emergency lighting logbook retained on site.
Fire alarm panel	Weekly	Operate a manual call point (a different point each week) to confirm the system operates correctly and the panel logs the event. Check the panel shows a normal/healthy status with no outstanding faults.
Detectors, call points and sounders	Every 6 months	Functionally test all detectors, call points, sounders and visual alarm devices in accordance with BS 5839-1 and clean smoke detectors as required.
Fire alarm system	Annually	Carry out a full annual inspection and service by a competent person in accordance with BS 5839-1, including standby battery condition, standby supply, and zone/cause-and-effect verification.
Logbook entries	Ongoing	Record all tests, false alarms, faults and remedial actions in the fire alarm logbook retained on site.
Cable tray, trunking and conduit	Annually	Visually inspect for damage, corrosion, loose covers or lids, and adequate support. Confirm segregation between power and data circuits is maintained.
Fire stopping at penetrations	Annually	Inspect fire-stopping seals around containment penetrations through fire-rated walls and floors for damage or unauthorised alteration and reinstate as necessary.
Cable management capacity	As required (on alteration)	Confirm spare capacity and fill ratios before adding new cables and update containment records and drawings following any changes.
Earthing and bonding of metallic containment	Every 5 years (or per EICR cycle)	Verify continuity and bonding of metallic containment systems as part of the periodic EICR.

SAMPLE

4. Manufacturer Product Data Sheets

Ref	Description	Source File
4.01	Excel Cat6 UTP LSOH Network Cable	100-080.pdf
4.02	Excel Cat6 RJ45 Euromod Data Module	100-300.pdf
4.03	Excel Cat6 6C RJ45 Module White	100-301.pdf
4.04	Excel Cat6 24-Port Patch Panel 1U	100-304.pdf
4.05	Excel 42U 800x800 Communications Rack	542-4288-GSBF-BK.pdf
4.06	British General 10AX Single 2-Way Switch	BG_DSHDOC_20201119AA_ 10A10ax-MetalClad-Switch.pdf
4.07	British General 2-Gang IP66 Switched Socket	bg_wp22.pdf
4.08	Collingwood 5ft Single Anti-Corrosive LED	Caiman 5ft AC5S (F).pdf
4.09	Collingwood 5ft Twin Anti-Corrosive LED	Caiman 5ft AC5T((G) - NOT USED.pdf
4.10	Calpeda CAT5 AGAP Booster Set	Calpeda Cat 5 BTM 61E AGAP 18 Booster Set.pdf
4.11	Collingwood 16W Commercial Downlight	CDL0116 Round Luminaires (D).pdf
4.12	Collingwood 24W Commercial Downlight	CDL0124 Round Luminaires (DI).pdf
4.13	JCC Single Circuit Track Section Black	Datasheet_[JC14003BLK]Single Circuit Track_(08-Jul-2022).pdf
4.14	JCC Single Circuit Track Live End	Datasheet_[JC14009BLK]Single Circuit Track Accessories_(08-Jul-2022).pdf
4.15	JCC Track Spotlight Black	Datasheet_[JC14032BLK]Standard Spotlight_(08-Jul-2022).pdf
4.16	JCC 5ft LED Batten Single	Datasheet_[JC71743]Skypack QR_(04-May-2022).pdf
4.17	CP Electronics Flush Ceiling PIR Presence	GEFL-IP Datasheet Issue 1 A4.pdf
4.18	Hager 125A 12-Way TPN Distribution Board	JK112BG.pdf
4.19	Hager 10-Way Lighting Distribution Unit	KLDS10.pdf
4.20	Collingwood 150W Linear Low Bay Light	LB15040 120 (H&HE).pdf
4.21	Mitsubishi Electric Lossnay Heat Recovery Ventilation	LGH-RVX-Brochure.pdf
4.22	British General 13A Single Switched Socket	MC521_MC522_MC523_MC524_ 13amp_socket_outlets.pdf
4.23	British General 13A FCU with Optional	metal-clad Data.pdf

EXAMPLE

Ref	Description	Source File
4.24	Mitsubishi Electric High SHF Cooling Only	MSY-TP35-50VF_High_SHF_Wall_Mounted_System_Product_Information_Sheet.pdf
4.25	Mitsubishi Electric Wall Mounted AC System	MSZ-AP_Product_Information_Sheet_2019.pdf
4.26	Turnbull & Scott Electric Over Door	ODH-Brochure-022021.pdf
4.27	Collingwood 600x600 LED Panel 30W	P2A19_30W 600x600 Grid Lighting (A & AE).pdf
4.28	Hager 4-Pin Plug White	P64AX.pdf
4.29	Mitsubishi Electric Large Capacity Ducted Indoor	PEA-M-R32-Power-Inverter-Heat-Pump-PI-SHEET.pdf
4.30	Mitsubishi Electric Large Ceiling Cassette AC	PLA-M_R32_Standard_Inverter__SP__Product_Information_Sheet_2019-1.pdf
4.31	Mitsubishi Electric High Capacity AC Outdoor	PUZ-ZM200-250_R322.pdf
4.32	Legrand Steel Surface Trunking	salamandre_mgr422c.pdf
4.33	Mitsubishi Electric 600x600 Ceiling Cassette AC	SLZ-M_R32_Standard_Inverter_Product_Information_Sheet_2019-1.pdf
4.34	Systemair 300mm Axial Extract Fan	Systemair_AW_300_EC_sileo_Axial_fan.pdf
4.35	Systemair 6-Inch Wall Fan	Systemair_ES6W_Wall_Fan_Systemair.pdf
4.36	Systemair Silent Box Fan 125mm	Systemair_KVK_Silent_125_EC.pdf
4.37	Systemair Silent Box Fan 200mm	Systemair_KVK_Silent_200_EC.pdf
4.38	STAG IP65 Enclosed Rotary Isolator 4	Technical Data Sheet.pdf
4.39	Tass Cable Management 3-Compartment Cavity Floor	tfb3-80_RCD_specs.pdf
4.40	Collingwood IP65 Colour Switchable Bulkhead	WL9530 Wall Lights (B&C).pdf
4.41	Hager 2-Gang Double Pole Switched Socket	WMSS82.pdf
4.42	Hager 13A FCU Switched	WMSSU83.pdf

SAMPLE

4. Manufacturer Product Data Sheets

4.01

Excel Cat6 UTP LSOH Network Cable

Source file: 100-080.pdf

SAMPLE

Excel Solid Cat6 Cable U/UTP 24AWG LSOH CPR Dca 305m Box Violet

Item Code: 100-080

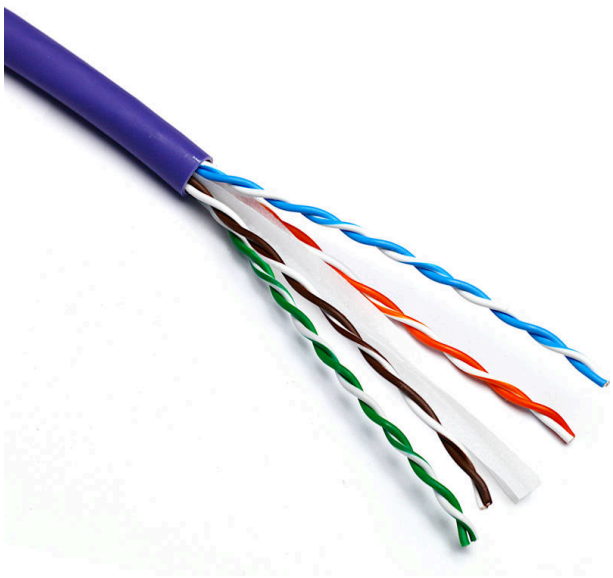

- Cat6 24AWG Copper Cable
- U/UTP No Overall Screening
- No Conductor Screening
- Outer sheath colour Violet
- Reaction-to-fire class according to EN 13501-6: Dca
- Smoke development class according to EN 13501-6: s2

Product Overview

Excel solid Cat6 ethernet cable U/UTP 24AWG LSOH CPR Dca manufactured and tested to the TIA/EIA 568-B.2-1, EN50173-1 and ISO/IEC 11801 Cat 6 specifications, 305m or 500m. Each cable consists of 8 colour coded solid copper conductors twisted together to form four pairs.

These are then formed around a central X-shaped polyethylene centre with the whole cable produced in a LSOH sheath.

Product Specifications

Feature	Values
Conductor surface	Bare
AWG size	24
Conductor category	Class 1 = solid
Total number of cores	8
Stranding element	Pairs
Specification core insulation	PE
Core identification	Colour
Overall screening	None
Conductor screening	None
Outer sheath material	Copolymer

SAMPLE

Outer sheath colour	Violet
Reaction-to-fire class according to EN 13501-6	Dca
Smoke development class according to EN 13501-6	s2
Euro class flaming droplets/particles according to EN 13501-6	d2
Euro class acidity according to EN 13501-6	a1
Halogen free (acc. EN 60754-1/2)	Yes
Flame retardant	In accordance with EN 60332-1-2 and EN 50399
Low smoke (acc. BS EN 61034-2)	Yes
Outer diameter approx.	6.1 mm
Installation Temperature Range	-10...60 °C
Operating Temperature Range	-20...75 °C
Category	6
NVP value	69 %

Cross-section diagram

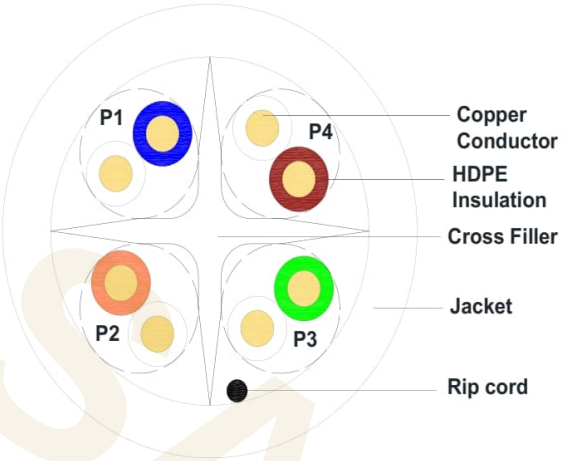

core:

P1: White/Blue

P2: White/Orange

P3: White/Green

P4: White/Brown

Cable specifications

Features	Values
Dielectric strength	2.5kV for 2s
Maximum pulling load	60N/6.1KgF
MBR during installation	8x cable OD

SAMPLE

MBR installed	4x cable OD

Standards

Applicable standard	Subject
ISO/IEC 11801-1:2017	Information technology - Generic cabling for customer premises: Part 1 General Requirements
IEC 61156-5:2020	Multicore and symmetrical pair/quad cables for digital communications - Part 5: Symmetrical pair/quad cables with transmission characteristics up to 1 000 MHz - Horizontal floor wiring - Sectional specification
EN 50173-1:2018	Information technology. Generic cabling systems - General requirements
EN 50173-2:2018	Information technology. Generic cabling systems - Office premises
BS EN 50288-3-1:2013	Multi-element metallic cables used in analogue and digital communication and control. Sectional specification for unscreened cables characterised up to 250 MHz
EN 50399:2011+A1:2016	Common test methods for cables under fire conditions. Heat release and smoke production measurement on cables during flame spread test. Test apparatus, procedures, results
IEC 60332-1-2:2004 + A12:2020	Tests on electric and optical fibre cables under fire conditions. Test for vertical flame propagation for a single insulated wire or cable. Procedure for 1 kW pre-mixed flame
ANSI/TIA 568-D:2015	Balanced Twisted-Pair Telecommunications Cabling and Components Standards
IEC 60754-2:2014	Test on gases evolved during combustion of materials from cables - Part 2: Determination of acidity (by pH measurement) and conductivity
IEC 61034-2:2005+A2:2020	Measurement of smoke density of cables burning under defined conditions – Part 2: Test procedure and requirements
EN 50575:2014 + A1:2016	Power, control and communication cables — Cables for general applications in construction works subject to reaction to fire requirements
RoHS	Compliant to the Restriction of Hazardous Substances
WFD	Compliant to Waste Framework Directive
SCIP	Compliant - Does Not Contain Substances of Concern in Products

SAMPLE

Part Number Table

Part Number	Description
100-080	Excel Solid Cat6 Cable U/UTP 24AWG LSOH CPR Dca 305m Box Violet
100-080-WT	Excel Solid Cat6 Cable U/UTP 24AWG LSOH CPR Dca 305m Box White

SAMPLE

Excel is a world class premium performing end to end infrastructure solution designed, Manufactured, supported and delivered without compromise.

Contact us at sales@excel-networking.com

E&OE. Excel is a registered trade name of Mayflex Holdings Ltd.

4. Manufacturer Product Data Sheets

4.02

Excel Cat6 RJ45 Euromod Data Module

Source file: 100-300.pdf

SAMPLE

Excel Cat6 (UTP) Unscreened Euromod RJ45 Module White

Item Code: 100-300



- Category 6
- Fits 27mm back box when used with bevelled faceplate
- Built-in slide label system
- Choice of colours
- LSA Style Termination Blocks
- 25 Year system warranty

Product Overview

Excel Category 6 RJ45 modules comply with the EIA TIA Standard for Category 6. Each shuttered module is supplied with a slide label field and space above, this is allowed for use of self adhesive or further labelling if required.

Termination can be made using Krone tooling, a cable tie base is positioned to the side of the IDC blocks to relieve cable stress.

Product Specifications

Feature	Values
Surface mounted	Yes (faceplate required)
Flush-mounted installation	Yes (faceplate required)
Floor box/sub-floor mounted	Yes (faceplate required)
Type of fastening	Engage (snap)
Type of connector	RJ45 8(8)
Category	6
Colour	White
RAL-number	9016
Connection type	LSA
With label space	Yes
Outlet direction	Straight

SAMPLE

Colour coding	Yes
Width of device	25 mm
Height of device	50 mm
Depth of device	33 mm

Product drawings

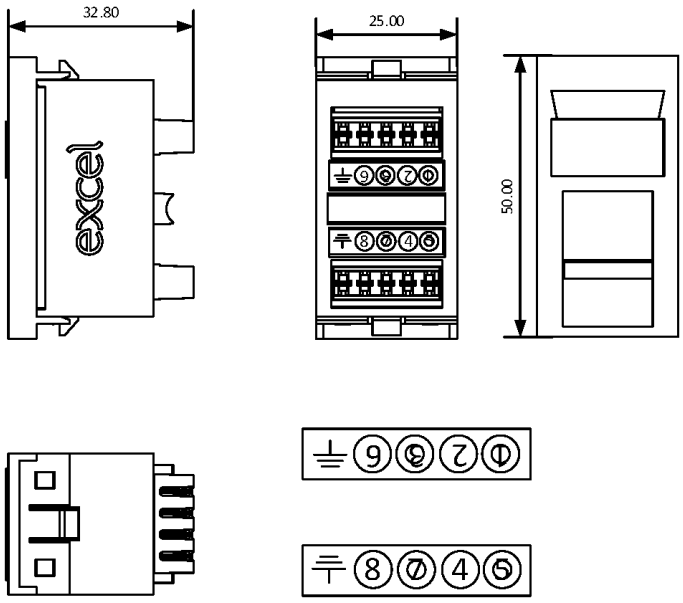

Standards

Applicable standard	Detail
ISO/IEC 11801:2011 (Ed 2.2)	Information technology - Generic cabling for customer premises
IEC 61156-5:2012 (Ed 2.1)	Multicore and symmetrical pair/quad cables for digital communications - Part 5: Symmetrical pair/quad cables with transmission characteristics up to 1 000 MHz - Horizontal floor wiring - Sectional specification
EN 50173-1:2018	Information technology. Generic cabling systems - General requirements
EN 50173-2:2007 including amendment A1:2010	Information technology. Generic cabling systems - Office premises
ANSI/TIA 568-C:2009	Balanced Twisted-Pair Telecommunications Cabling and Components Standards

SAMPLE

RoHS	Restriction of Hazardous Substances - Compliant
WFD	Compliant to Waste Framework Directive
SCIP	Compliant - Does Not Contain Substances of Concern in Products

Part Number Table

Part Number	Description
100-298	Excel Cat6 (UTP) Unscreened Euromod RJ45 Module Black
100-300	Excel Cat6 (UTP) Unscreened Euromod RJ45 Module White
100-700	Excel Cat5e (UTP) Unscreened Euromod RJ45 Module White
100-730	Excel Cat5e (UTP) Unscreened Euromod RJ45 Module Blue
100-731	Excel Cat5e (UTP) Unscreened Euromod RJ45 Module Red
100-732	Excel Cat5e (UTP) Unscreened Euromod RJ45 Module Green

SAMPLE

Excel is a world class premium performing end to end infrastructure solution designed, Manufactured, supported and delivered without compromise.

Contact us at sales@excel-networking.com

E&OE. Excel is a registered trade name of Mayflex Holdings Ltd.

4. Manufacturer Product Data Sheets

4.03

Excel Cat6 6C RJ45 Module White

Source file: 100-301.pdf

SAMPLE

Excel Cat6 (UTP) Unscreened 6C RJ45 Module White

Item Code: 100-301



- Category 6
- Choice of colours
- For use in floor box installations
- Independently verified
- Built in slide label system
- 25 Year system warranty

Product Overview

Excel Category 6 6c modules are ideal for floor box installations. The compact two piece design allows for a fast and easy installation and results in a low profile finish.

Product Specifications

Feature	Values
Surface mounted	Yes (faceplate required)
Flush-mounted installation	Yes (faceplate required)
Floor box/sub-floor mounted	Yes (faceplate required)
Type of fastening	Engage (snap)
Type of connector	RJ45 8(8)
Category	6
RAL-number	9016
Connection type	LSA
With label space	Yes
Outlet direction	Straight
Colour coding	Yes
Width of device	22 mm
Height of device	37 mm

SAMPLE

Depth of device	28.6 mm

Product drawing

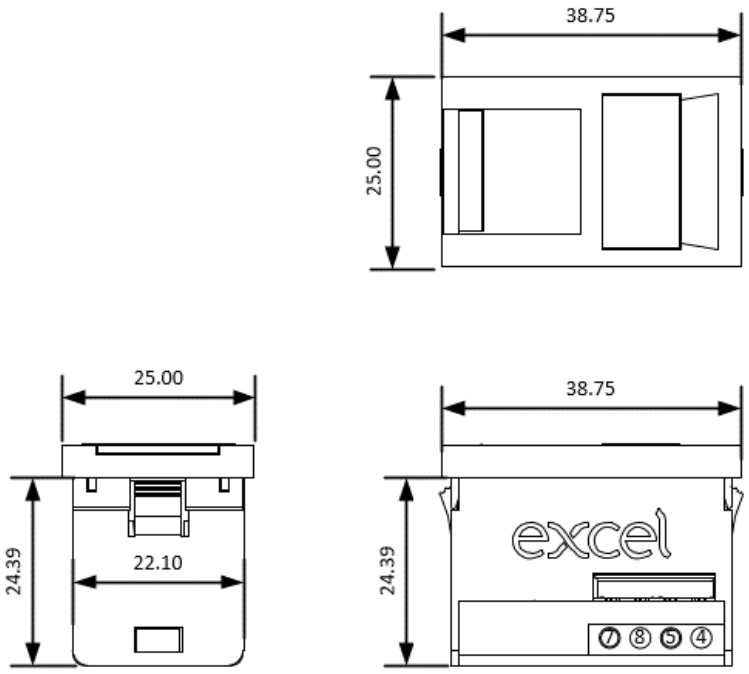

Standards

Applicable standard	Detail
ISO/IEC 11801:2011 (Ed 2.2)	Information technology - Generic cabling for customer premises
IEC 61156-5:2012 (Ed 2.1)	Multicore and symmetrical pair/quad cables for digital communications - Part 5: Symmetrical pair/quad cables with transmission characteristics up to 1 000 MHz - Horizontal floor wiring - Sectional specification
EN 50173-1:2018	Information technology. Generic cabling systems - General requirements
EN 50173-2:2007 including amendment A1:2010	Information technology. Generic cabling systems - Office premises
ANSI/TIA 568-C:2009	Balanced Twisted-Pair Telecommunications Cabling and Components Standards
RoHS	Restriction of Hazardous Substances - Compliant

SAMPLE

WFD	Compliant to Waste Framework Directive
SCIP	Compliant - Does Not Contain Substances of Concern in Products

Part Number Table

Part Number	Description
100-301	Excel Cat6 (UTP) Unscreened 6C RJ45 Module White
100-734	Excel Cat5e (UTP) Unscreened 6C RJ45 Module Red
100-758	Excel Cat5e (UTP) Unscreened 6C RJ45 Module White

SAMPLE

4. Manufacturer Product Data Sheets

4.04

Excel Cat6 24-Port Patch Panel 1U

Source file: 100-304.pdf

SAMPLE

Excel Cat6 24 Port Unscreened Patch Panel 1U LSA Punch Down Cable Management Black

Item Code: 100-304

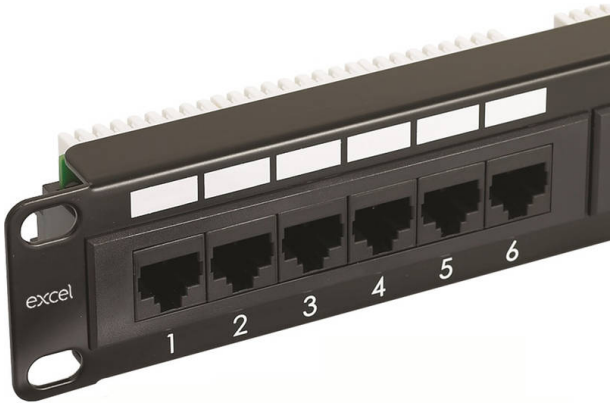

- Available in 24 or 48 ports
- Backwards compatible
- Rear cable management
- LSA Style Right Angled Termination
- Cage nuts and mini cable ties included
- T568A/B Wiring Configuration

Product Overview

100-304 Excel Cat6 24 Port Unscreened Patch Panel 1U LSA Punch Down Black, available as part of a range of Cat6 Patch Panels in stock at Mayflex.
Excel Category 6 Unscreened Patch Panels have been designed to meet or exceed the latest ISO and TIA requirements for category 6 compliance.
Each panel has a screen printed labelling field positioned above each port, included with the panel is a pre-printed self-adhesive labelling sheet, pre-numbered 1- 96, for fast and easy labelling on site.

Termination can be made using LSA compatible tools, and cable tie bridges are positioned between the IDC blocks to relieve cable stress. Each panel consists of a number of 8 way blocks of RJ45 sockets, housed in a high quality plastic moulding.

Product Specifications

Feature	Values
Number of ports – loaded	24
Type of connector	RJ45 8(8)
Category	6
Connection type	LSA
Number of rack units (RU)	1
Colour	Black
Mounting method	19 inch mounting
Height	44 mm

SAMPLE

Width	480 mm
Depth	33 mm

SAMPLE

Product drawing

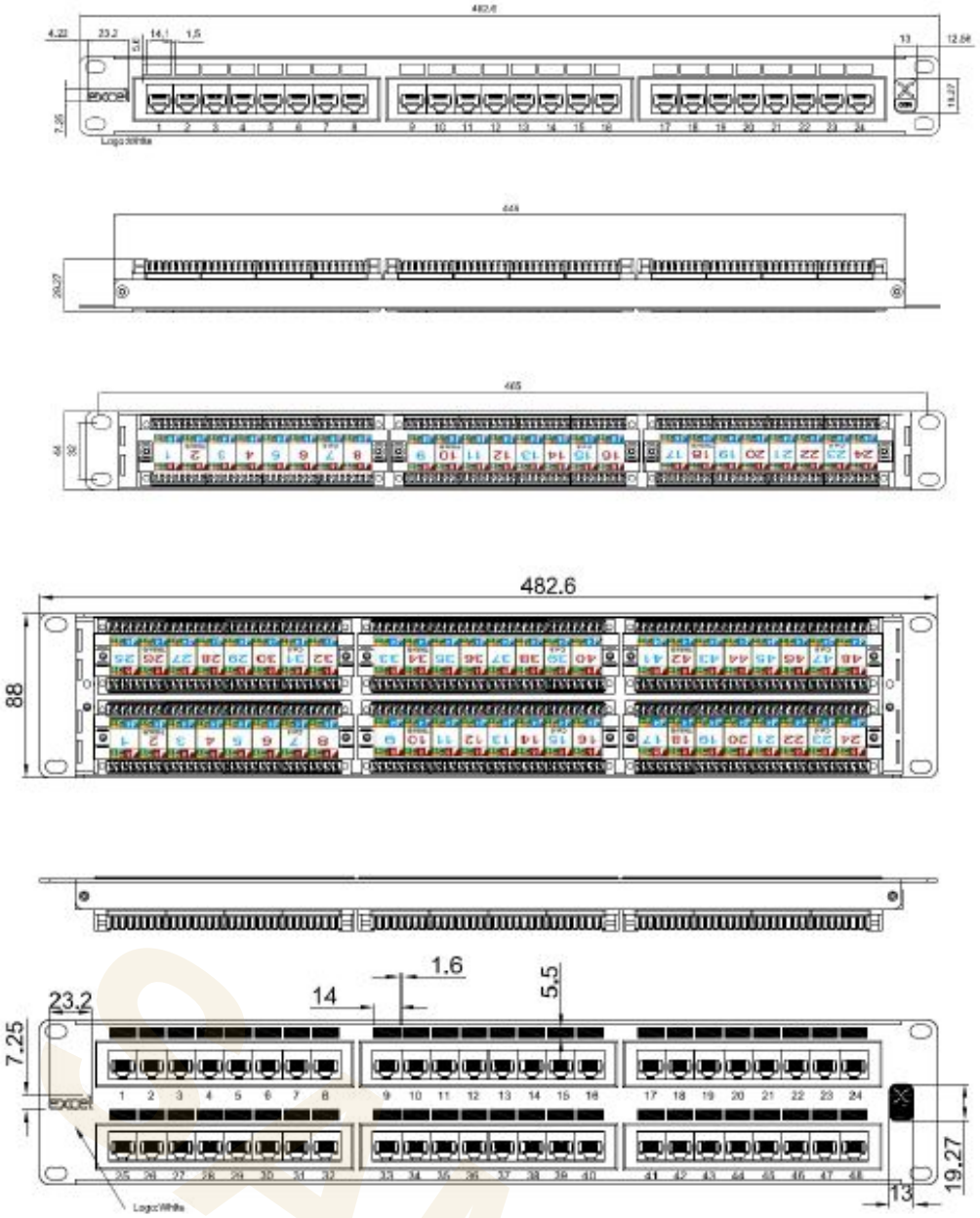

EXAMPLE

Additional specifications

Features	Values
Wiring Specification	T568A/T568B
RJ45 Jack Min life expectancy	750 insertions
RJ45 Jack contact	50 microinch gold over 100 microinch nickel undercoat
IDC Contacts Max life expectancy	200 terminations
Contact compatibility	22 to 26AWG
Operating Temperature Range	-10°C to 60°C
Storage Temperature Range	-40°C to 68°C
Relative Humidity	10% to 90%
Panel material	SPCC
Frame material	ABS
Jack housing material	PBT, 30% glass fiber filled
IDC material	Phosphor bronze, tin over nickel undercoat

Standards

Applicable standard	Detail
ISO/IEC 11801-1:2017	Information technology - Generic cabling for customer premises: Part 1 General Requirements
IEC 61156-5:2009+AMD1:2012 CSV	Multicore and symmetrical pair/quad cables for digital communications - Part 5: Symmetrical pair/quad cables with transmission characteristics up to 1 000 MHz - Horizontal floor wiring - Sectional specification
EN 50173-1:2018	Information technology. Generic cabling systems - General requirements
EN 50173-2:2007 + A1:2010	Information technology. Generic cabling systems - Office premises
ANSI/TIA 568-2.D	Balanced Twisted-Pair Telecommunications Cabling and Components Standards
ANSI/EIA-310-E	Electronic Industries Association standard for horizontal spacing, vertical hole spacing, rack opening and front panel width
RoHS	Restriction of Hazardous Substances - Compliant
WFD	Compliant to Waste Framework Directive
SCIP	Compliant - Does Not Contain Substances of Concern in

SAMPLE

Part Number Table

Part Number	Description
100-304	Excel Cat6 24 Port Unscreened Patch Panel 1U LSA Punch Down Cable Management Black
100-306	Excel Cat6 48 Port Unscreened Patch Panel 2U LSA Punch Down Cable Management Black

SAMPLE

Excel is a world class premium performing end to end infrastructure solution designed, Manufactured, supported and delivered without compromise.

Contact us at sales@excel-networking.com

E&OE. Excel is a registered trade name of Mayflex Holdings Ltd.

4. Manufacturer Product Data Sheets

4.05

Excel 42U 800x800 Communications Rack

Source file: 542-4288-GSBF-BK.pdf

SAMPLE

Environ CR800 42U Rack 800x800mm Glass (F) Steel (R) B/Panels F/Mgmt Black

Item Code: 542-4288-GSBF-BK



- Choice of doors/depths/colours available
- 19" profiles marked with U height position
- Large cut out in base for cable entry
- Brush strip cable entry in roof and base of rack
- IP20 when fitted with base plate
- Racks supplied assembled or flat packed

Product Overview

Environ CR800 Comms Racks are a versatile range of 800mm wide racks with features suitable for a wide range of applications within the data, security, audio visual and telecommunications markets.

Product Specifications

Feature	Values
Mounting Profile	Front and rear
Type of profile rail	L-shaped
Number of doors	2
Type of ventilation	Passive
Width	800 mm
Height	2070 mm
Depth	800 mm
Modular spacing	19 inch
Number of rack units (RU)	42
Max. load capacity	800 kg
With roof plate	Yes

SAMPLE

With earthing	Yes
With front door	Yes
Front door material	Glass
Front door locking system	One point
With rear door	Yes
Rear door material	Steel
Rear door locking system	One point
Side panels included	Yes
With vertical cable management	Yes
Material	Steel
Type of surface	Powder coated
Colour	Black
RAL-number	9004
IP-rating	IP20
Application	Communications Rack

Additional specifications

Features	Values
Material	SPCC Cold Rolled Steel
19" Rails	2.0 mm thick
Side Panels	1.0 mm thick
Other	1.2 mm thick
Front door	Swing handle cam lock
Rear door	Barrel lock
Side panels lock	Single point barrel lock
Jacking feet additional height	50-80 mm
Castors additional height	70 mm

SAMPLE

Standards

Standard	Detail
ANSI/EIA-310-E	Electronic Industries Association standard for horizontal spacing, vertical hole spacing, rack opening and front panel width
BS EN 60297-3-100:2009	Mechanical structures for electronic equipment. Dimensions of mechanical structures of the 482,6 mm (19 in) series. Basic dimensions of front panels, subracks, chassis, racks and cabinets
DIN 41494 Part 1 & 7	Panel Mounting Racks For Electronics Equipments; Racks And Panels, Dimensions; Dimensions of cabinets and suites of racks
WFD	Compliant to Waste Framework Directive
SCIP	Compliant - Does Not Contain Substances of Concern in Products

SAMPLE

Product images


Four-way brush entry roof panel


Quick-slam latch side panels


Swing handle glass front door


Steel rear door

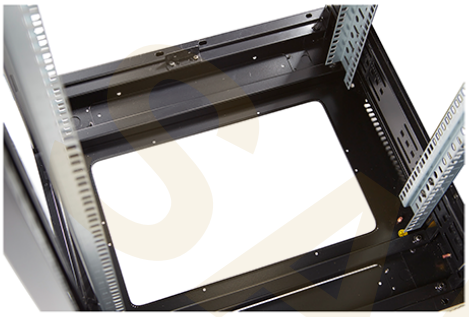
Large base entry


High-density vertical cable management

EXAMPLE

Product drawings

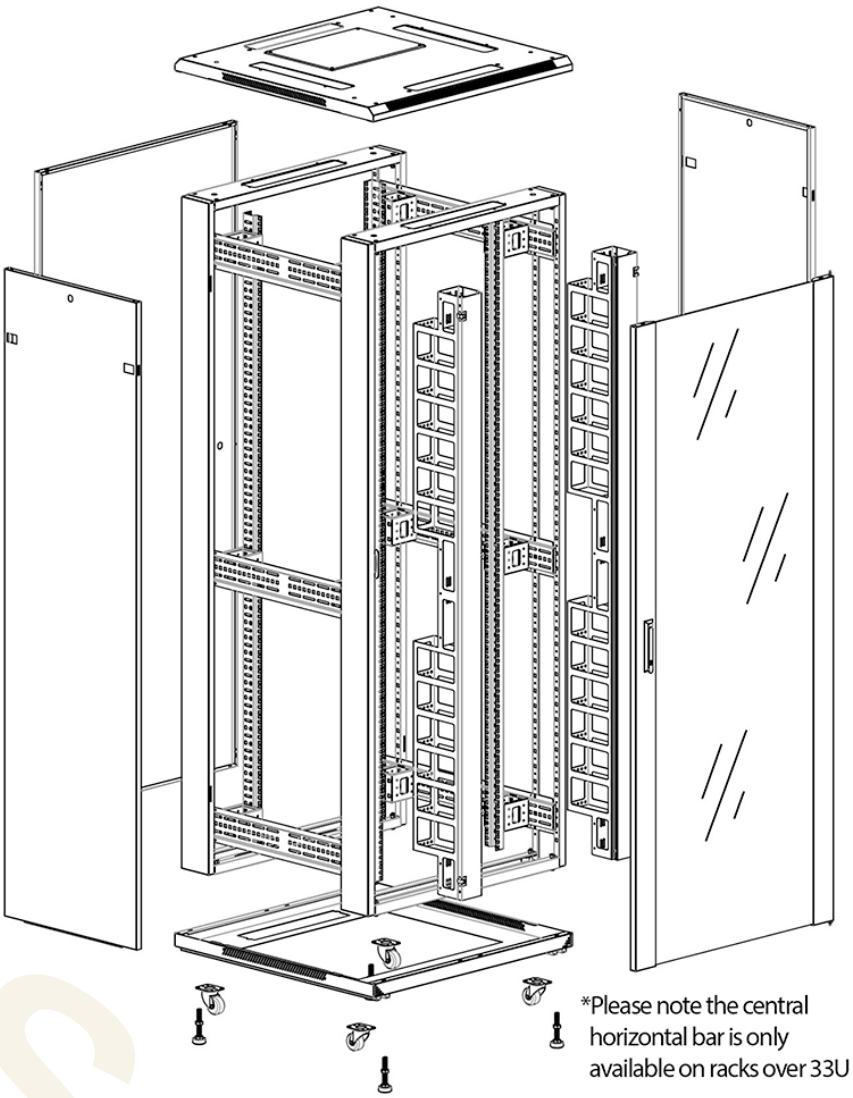

SAMPLE

Product drawings

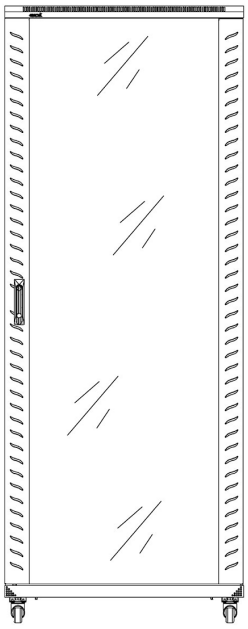

Front

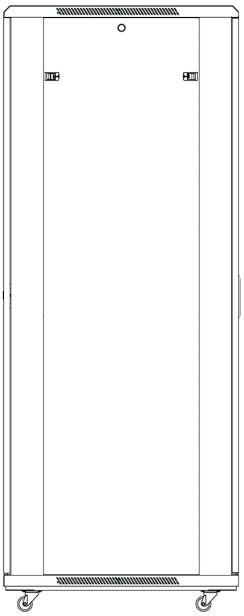

Side

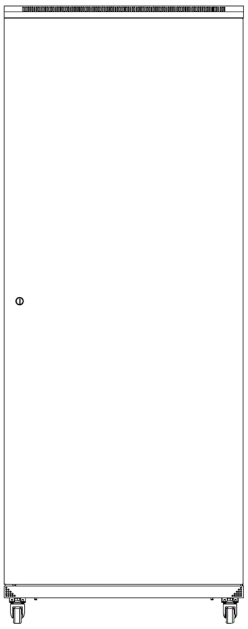

Rear

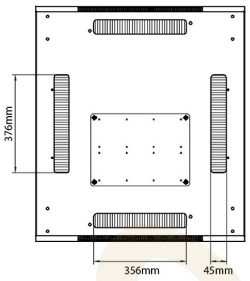

Roof

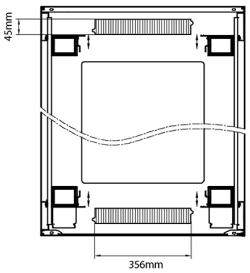

Base

Base Cut Out Dimensions

580 mm Wide
by
276 mm Deep (600 mm deep rack)
476 mm Deep (800 mm deep rack)
676 mm Deep (1000 mm deep rack)

Part Number Table

Part Number	Description
542-2486-GSBF-BK	Environ CR800 24U Rack 800x600mm Glass (F) Steel (R) B/Panels F/Mgmt Black
542-2486-GSBF-BK-FP	Environ CR800 24U Rack 800x600mm Glass (F) Steel (R) B/Panels F/Mgmt Black Flat Pack

SAMPLE

542-2486-GSBF-GW	Environ CR800 24U Rack 800x600mm Glass (F) Steel (R) B/Panels F/Mgmt Grey White
542-2486-GSBF-GW-FP	Environ CR800 24U Rack 800x600mm Glass (F) Steel (R) B/Panels F/Mgmt Grey White Flat Pack
542-2488-GSBF-BK	Environ CR800 24U Rack 800x800mm Glass (F) Steel (R) B/Panels F/Mgmt Black
542-2488-GSBF-BK-FP	Environ CR800 24U Rack 800x800mm Glass (F) Steel (R) B/Panels F/Mgmt Black Flat Pack
542-2488-GSBF-GW	Environ CR800 24U Rack 800x800mm Glass (F) Steel (R) B/Panels F/Mgmt Grey White
542-2488-GSBF-GW-FP	Environ CR800 24U Rack 800x800mm Glass (F) Steel (R) B/Panels F/Mgmt Grey White Flat Pack
542-29810-GSBF-BK	Environ CR800 29U Rack 800x1000mm Glass (F) Steel (R) B/Panels F/Mgmt Black
542-29810-GSBF-BK-FP	Environ CR800 29U Rack 800x1000mm Glass (F) Steel (R) B/Panels F/Mgmt Black Flat Pack
542-29810-GSBF-GW	Environ CR800 29U Rack 800x1000mm Glass (F) Steel (R) B/Panels F/Mgmt Grey White
542-29810-GSBF-GW-FP	Environ CR800 29U Rack 800x1000mm Glass (F) Steel (R) B/Panels F/Mgmt Grey White Flat Pack
542-2986-GSBF-BK	Environ CR800 29U Rack 800x600mm Glass (F) Steel (R) B/Panels F/Mgmt Black
542-2986-GSBF-BK-FP	Environ CR800 29U Rack 800x600mm Glass (F) Steel (R) B/Panels F/Mgmt Black Flat Pack
542-2986-GSBF-GW	Environ CR800 29U Rack 800x600mm Glass (F) Steel (R) B/Panels F/Mgmt Grey White
542-2986-GSBF-GW-FP	Environ CR800 29U Rack 800x600mm Glass (F) Steel (R) B/Panels F/Mgmt Grey White Flat Pack
542-2988-GSBF-BK	Environ CR800 29U Rack 800x800mm Glass (F) Steel (R) B/Panels F/Mgmt Black
542-2988-GSBF-BK-FP	Environ CR800 29U Rack 800x800mm Glass (F) Steel (R) B/Panels F/Mgmt Black Flat Pack
542-2988-GSBF-GW	Environ CR800 29U Rack 800x800mm Glass (F) Steel (R) B/Panels F/Mgmt Grey White
542-2988-GSBF-GW-FP	Environ CR800 29U Rack 800x800mm Glass (F) Steel (R) B/Panels F/Mgmt Grey White Flat Pack
542-33810-GSBF-BK	Environ CR800 33U Rack 800x1000mm Glass (F) Steel (R) B/Panels F/Mgmt Black
542-33810-GSBF-BK-FP	Environ CR800 33U Rack 800x1000mm Glass (F) Steel (R) B/Panels F/Mgmt Black Flat Pack

SAMPLE

542-33810-GSBF-GW	Environ CR800 33U Rack 800x1000mm Glass (F) Steel (R) B/Panels F/Mgmt Grey White
542-33810-GSBF-GW-FP	Environ CR800 33U Rack 800x1000mm Glass (F) Steel (R) B/Panels F/Mgmt Grey White Flat Pack
542-3386-GSBF-BK	Environ CR800 33U Rack 800x600mm Glass (F) Steel (R) B/Panels F/Mgmt Black
542-3386-GSBF-BK-FP	Environ CR800 33U Rack 800x600mm Glass (F) Steel (R) B/Panels F/Mgmt Black Flat Pack
542-3386-GSBF-GW	Environ CR800 33U Rack 800x600mm Glass (F) Steel (R) B/Panels F/Mgmt Grey White
542-3386-GSBF-GW-FP	Environ CR800 33U Rack 800x600mm Glass (F) Steel (R) B/Panels F/Mgmt Grey White Flat Pack
542-3388-GSBF-BK	Environ CR800 33U Rack 800x800mm Glass (F) Steel (R) B/Panels F/Mgmt Black
542-3388-GSBF-BK-FP	Environ CR800 33U Rack 800x800mm Glass (F) Steel (R) B/Panels F/Mgmt Black Flat Pack
542-3388-GSBF-GW	Environ CR800 33U Rack 800x800mm Glass (F) Steel (R) B/Panels F/Mgmt Grey White
542-3388-GSBF-GW-FP	Environ CR800 33U Rack 800x800mm Glass (F) Steel (R) B/Panels F/Mgmt Grey White Flat Pack
542-42810-GSBF-BK	Environ CR800 42U Rack 800x1000mm Glass (F) Steel (R) B/Panels F/Mgmt Black
542-42810-GSBF-BK-FP	Environ CR800 42U Rack 800x1000mm Glass (F) Steel (R) B/Panels F/Mgmt Black Flat Pack
542-42810-GSBF-GW	Environ CR800 42U Rack 800x1000mm Glass (F) Steel (R) B/Panels F/Mgmt Grey White
542-42810-GSBF-GW-FP	Environ CR800 42U Rack 800x1000mm Glass (F) Steel (R) B/Panels F/Mgmt Grey White Flat Pack
542-4286-GSBF-BK	Environ CR800 42U Rack 800x600mm Glass (F) Steel (R) B/Panels F/Mgmt Black
542-4286-GSBF-BK-FP	Environ CR800 42U Rack 800x600mm Glass (F) Steel (R) B/Panels F/Mgmt Black Flat Pack
542-4286-GSBF-GW	Environ CR800 42U Rack 800x600mm Glass (F) Steel (R) B/Panels F/Mgmt Grey White
542-4286-GSBF-GW-FP	Environ CR800 42U Rack 800x600mm Glass (F) Steel (R) B/Panels F/Mgmt Grey White Flat Pack
542-4288-GSBF-BK	Environ CR800 42U Rack 800x800mm Glass (F) Steel (R) B/Panels F/Mgmt Black
542-4288-GSBF-BK-FP	Environ CR800 42U Rack 800x800mm Glass (F) Steel (R) B/Panels F/Mgmt Black Flat Pack
542-4288-GSBF-GW	Environ CR800 42U Rack 800x800mm Glass (F) Steel (R) B/Panels F/Mgmt

SAMPLE

	Grey White
542-4288-GSBF-GW-FP	Environ CR800 42U Rack 800x800mm Glass (F) Steel (R) B/Panels F/Mgmt Grey White Flat Pack
542-47810-GSBF-BK	Environ CR800 47U Rack 800x1000mm Glass (F) Steel (R) B/Panels F/Mgmt Black
542-47810-GSBF-BK-FP	Environ CR800 47U Rack 800x1000mm Glass (F) Steel (R) B/Panels F/Mgmt Black Flat Pack
542-47810-GSBF-GW	Environ CR800 47U Rack 800x1000mm Glass (F) Steel (R) B/Panels F/Mgmt Grey White
542-47810-GSBF-GW-FP	Environ CR800 47U Rack 800x1000mm Glass (F) Steel (R) B/Panels F/Mgmt Grey White Flat Pack
542-4786-GSBF-BK	Environ CR800 47U Rack 800x600mm Glass (F) Steel (R) B/Panels F/Mgmt Black
542-4786-GSBF-BK-FP	Environ CR800 47U Rack 800x600mm Glass (F) Steel (R) B/Panels F/Mgmt Black Flat Pack
542-4786-GSBF-GW	Environ CR800 47U Rack 800x600mm Glass (F) Steel (R) B/Panels F/Mgmt Grey White
542-4786-GSBF-GW-FP	Environ CR800 47U Rack 800x600mm Glass (F) Steel (R) B/Panels F/Mgmt Grey White Flat Pack
542-4788-GSBF-BK	Environ CR800 47U Rack 800x800mm Glass (F) Steel (R) B/Panels F/Mgmt Black
542-4788-GSBF-BK-FP	Environ CR800 47U Rack 800x800mm Glass (F) Steel (R) B/Panels F/Mgmt Black Flat Pack
542-4788-GSBF-GW	Environ CR800 47U Rack 800x800mm Glass (F) Steel (R) B/Panels F/Mgmt Grey White
542-4788-GSBF-GW-FP	Environ CR800 47U Rack 800x800mm Glass (F) Steel (R) B/Panels F/Mgmt Grey White Flat Pack

SAMPLE

4. Manufacturer Product Data Sheets

4.06

British General 10AX Single 2-Way Switch

Source file: BG_DSHDOC_20201119AA_10A10ax-MetalClad-Switch.pdf

SAMPLE

Technical Data

10 Amp 10 AX Switches

Brief product description:

BG's Nexus range of plate switches have been designed to perform at 10AX inductive loads. A rugged, scratch resistant range, suitable for everyday use in commercial and industrial environments.

Manufactured in heavy gauge steel and finished with epoxy powder coating.

The Fan Isolator switch has a triple pole switching design, however can be used for double pole applications if required.

Features:

- Flat profile with rounded edges
- Backed out captive screws for easy installation
- 10 Amp, 10AX inductive rated

Product Images



MC512/MC513



MC514



MC542

MC543

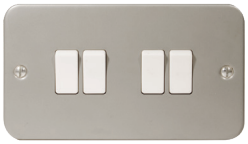

MC544

Technical Specifications

Standard(s)	BS EN 60669-1
Rating	10 Amp, 250V~(10AX – no derating for inductive or fluorescent loads)
Contact Gap	3.0mm minimum
Terminal Capacity	4 x 1.0mm^2 4 x 1.5mm^2 2 x 2.5mm^2 1 x 4.0mm^2
RoHS Directive	No
WEEE Directive	No
Size	81.5mm x 81.5mm x 50mm
	(MC512, MC513, MC514, MC542, MC543 products)
	142mm x 81.5mm x 50mm (MC544 products)

Packaging Information

Cat No.	Description	Packaging Type			Pack Quantity			Barcode		
		Product	Inner Box	Outer Box	Each	Inner Box	Outer Box	Individual	Inner Box	Outer Box
MC512	10AX 1G,2W	Plain PolyBag	Plain Inner	Plain Outer	1	10	50	/	5021166051298	5021166051281
MC513	10AX Intermediate	Plain PolyBag	Plain Inner	Plain Outer	1	10	50	/	5021166051397	5021166051380
MC514	10AX 1G, Bell Push	Plain PolyBag	Plain Inner	Plain Outer	1	10	50	/	5021166051496	5021166051489
MC542	10AX 2G,2W	Plain PolyBag	Plain Inner	Plain Outer	1	10	50	/	5021166054299	5021166054282
MC543	10AX 3G,2W	Plain PolyBag	Plain Inner	Plain Outer	1	10	50	/	5021166054398	5021166054381
MC544	10AX 4G,2W	Plain PolyBag	Plain Inner	Plain Outer	1	5	25	/	5021166054497	5021166054480

SAMPLE

10 Amp 10 AX Switches

Weights & Dimensions

Cat No.	Description	Dimension (W x L x H) cm			Weight (g)			CMB (m^3)
		Product	Inner Box	Outer Box	Each	Inner Box	Outer Box	Outer Box
MC512	10AX 1G,2W		16.6 x 25.8 x 8.3	17.6 x 45 x 27			12610	0.021384
MC513	10AX Intermediate		16.6 x 25.8 x 8.3	17.6 x 45 x 27				0.021384
MC514	10AX 1G, Bell Push		16.6 x 25.8 x 8.3	17.6 x 45 x 27				0.021384
MC542	10AX 2G,2W		16.6 x 25.8 x 8.3	17.6 x 45 x 27			13210	0.021384
MC543	10AX 3G,2W		16.6 x 25.8 x 8.3	17.6 x 45 x 27			13940	0.021384
MC544	10AX 4G,2W		14.5 x 25.8 x 8.3	15.5 x 45 x 27			11260	0.0188325

Installation Information

Safety Warning

Before use please read carefully and use in accordance with these safety wiring instructions.

Before commencing any electrical work ensure the supply . Either by switching off the consumer unit or by removing the appropriate fuse.

Wiring should be in accordance with the latest edition of the IEE regulations (BS 7671).

Wire Identification – Twin & Earth Cable

= Green/Yellow Sleeving

= Black (pre Apr 04) / Blue (after Apr 04)

= Red (pre Apr 04) / Brown (after Apr 04)



Technical Helpline: 0845 194 7584
If in doubt consult a competent electrician.

The ends of the individual conductors should have the insulation removed by approx.12mm. Any bare earth conductors should be sleeved to within 12mm of the ends.
(These details are for general information only and conductor lengths may need to be trimmed in certain installations).

General Installation Instructions

1) If using the new product to replace an old one, note the cable connections and wire up new product in the same way as the old one, with Earthing as stated in these instructions.
2) Ensure the mounting box (metal or patress) for either flush or surface mounting is the appropriate size for the product.
3) Route the cable through the most suitable entry point of the mounting box. If a metal box is used, a protective cable grommet should be used.
4) Cables should be prepared so a sufficient conductor length reaches the terminals. Strip the ends of the individual conductors so that an adequate length enters the terminals.
5) Carefully arrange the wiring to lie along the edges of the product or box, keeping the central area clear.
6) To assist with the correct installation please consult the appropriate wiring diagram on this leaflet.
7) When connecting the new accessory ensure that only the bare end of the wire enters the terminal, and no bare wires are visible.

Always tighten the terminal screws securely, but do not overtighten.

An earth connection should always be made between the mounting box earth terminal, and the accessory earth terminal, where fitted. If this earth wire is bare, it is essential that it is sheathed with a length of green/yellow sleeving.

8) Carefully position the accessory into the wall box, ensuring that no wires are trapped between the plate and the wall. Do not overtighten the screws. (Fit screw covers + clip-on)
9) Once work has been completed correctly, replace the fuse for the circuit, switch the power back on, and test.

The product is now ready for use.

* Note - If your installation uses a four lug metal mounting box, remove the top and bottom lugs or bend fully back.

One Way Switching

One way switching is used in installations that require just one switch to control a light (or circuit) i.e. on or off.

A two-way switch can be used for one-way connection, use COM and L1 terminals.

For multiple gang switches (2, 3, 4 & 6) repeat wiring method for each switch.

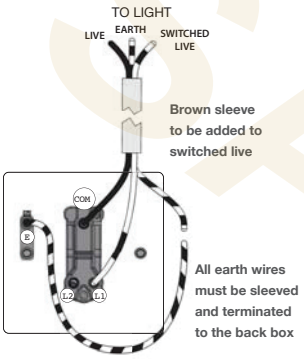

Two Way Switching

Two way switching is used where a light is controlled by two switches.

For multiple gang switches (2, 3, 4 & 6) repeat wiring method for each switch.

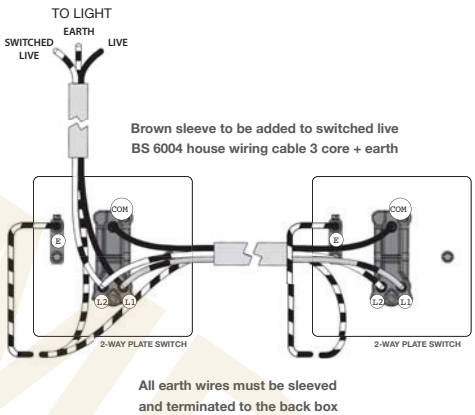

SAMPLE

Installation Information

Bell Push

The bell push is a one way switch with a retractive rocker switch. Before installing, ensure a bell unit is suitable for supply voltage.

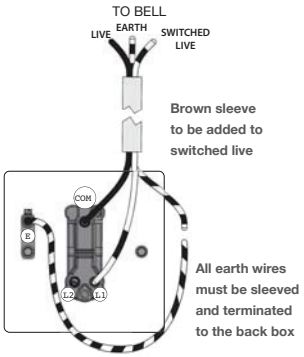

Intermediate Switching

Intermediate switching is used in installations that require three or more switches to control a light, and should be used together with two 2-way switches.

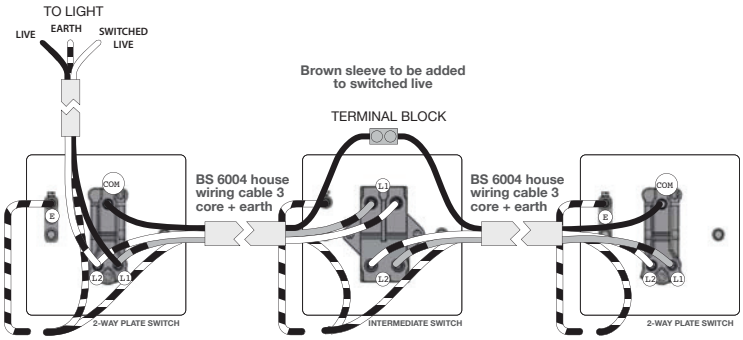

Fan Isolator - 3 Pole Switch

During repair or installation or routine maintenance the power supply to the fan unit must be disconnected. This isolating switch can be installed as shown in the diagrams to enable the remainder of the circuit to remain live.

These instructions should be read in conjucntion with the instructions supplied with the fan unit and the latest IEE Wiring Regulations.

Please follow the appropriate wiring diagram below for your particular installation.

Important

The continuity of the protective conductors must be maintaied. The isolator switch shall be so situated as to be inacessible to a person using a fixed bath or shower.

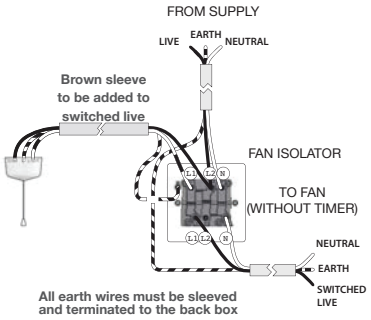

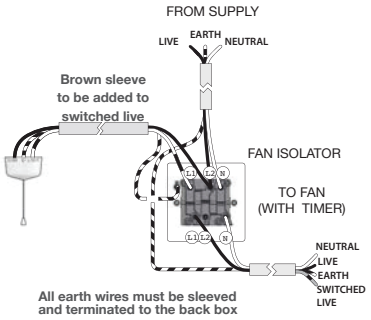

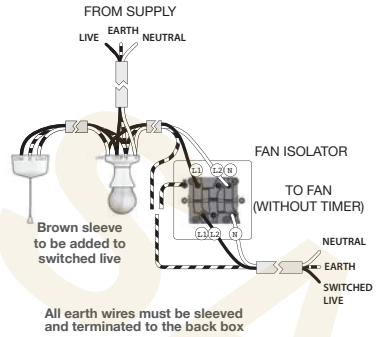

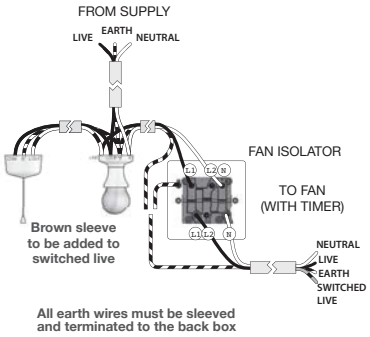

SAMPLE

4. Manufacturer Product Data Sheets

4.07

British General 2-Gang IP66 Switched Socket

Source file: bg_wp22.pdf

SAMPLE

Technical Data

13 Amp Socket Outlets

Brief product description:

A range of IP rated accessories designed to protect the potentially dangerous electricity supply in the most arduous of conditions

Features:

- Stylish modern profile
- Colour coded terminals with backed out captive screws for easy installation
- Covers to seal the fixing screws
- 2 Earth terminals in socket except WP23 which has 1
- 1 Earth terminal in mounting box
- All cable entries in the 4 sides have removable blanking caps.
- Housing will accept accessories from the Nexus range
- Cover will stay open to allow for easy access to sockets
- See-through cover allows status of switches to be seen
- Latched type, 30mA trip current, 40mS trip

Product Images



WP21

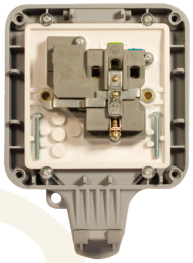

WP21 Rear View



WP23

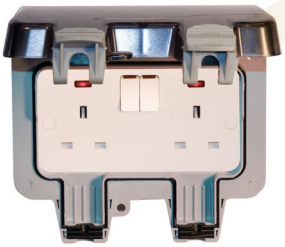

WP22

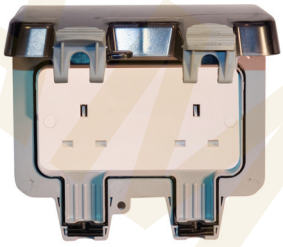

WP24

SAMPLE

13 Amp Socket Outlets

Technical Specifications

Standard(s)	BS 1363 Part 2
Rating	13 Amp 250V~
Switch Type	Double pole (WP21, WP22 products)
Contact Gap	3.0mm minimum (WP21, WP22 products)
Terminal Capacity	3 x 2.5mm² 3 x 4mm² 2 x 6.0mm²
IP Rating	IP66
RoHS Directive	No
WEEE Directive	No
Number of cable entries	5 x 20mm. 1 in each of 3 sides and 2 in the remaining side
	1 drill out entry 20/25mm in rear face (WP21, WP23 products)
	8 x 20mm. 1 in each of the 2 sides and 3 in each of the top and bottom faces
	1 drill out entry 20/25mm in rear face (WP22, WP24 products)
Size	111mm x 154mm x 80mm (WP21, WP23 products)
	171mm x 154mm x 80mm (WP22, WP24 products)

Line Diagrams

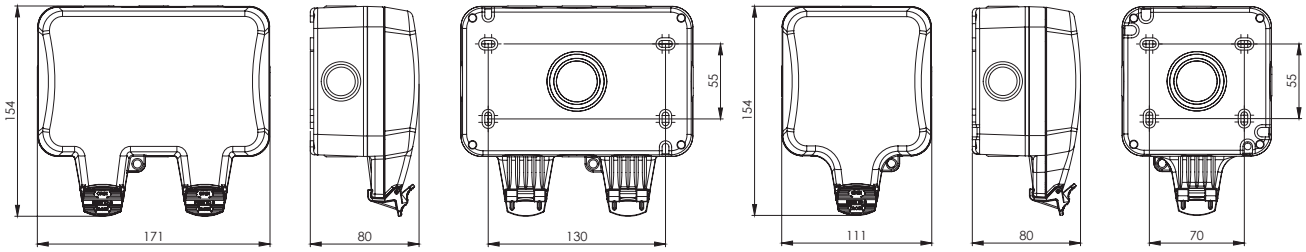

WP22 / WP24

WP21 / WP23

Packaging Information

Cat No.	Description	Packaging Type			Pack Quantity			Barcode		
		Product	Inner Box	Outer Box	Each	Inner Box	Outer Box	Individual	Inner Box	Outer Box
WP21	1G 13A, Sw Skt	Printed Box	/	Printed Outer Box	1	/	10	5050765022170	/	5050765022279
WP22	2G 13A, Sw Skt, DP	Printed Box	/	Printed Outer Box	1	/	10	5050765022200	/	5050765022309
WP23	1G 13A UnSw Skt	Printed Box	/	Printed Outer Box	1	/	10	5050765022187	/	5050765022286
WP24	2G 13A UnSw Skt	Printed Box	/	Printed Outer Box	1	/	10	5050765022194	/	5050765022293

Weights & Dimensions

Cat No.	Description	Dimension (W x L x H) cm			Weight (g)			CMB (m^3)
		Product	Inner Box	Outer Box	Each	Inner Box	Outer Box	Outer Box
WP21	1G 13A, Sw Skt	12 x 9 x 16.5	/	47.5 x 35.5 x 14	330	/	450	0.013
WP22	2G 13A, Sw Skt, DP	18 x 9 x 16.5	/	47.5 x 35.5 x 20	480	/	640	0.033
WP23	1G 13A UnSw Skt	12 x 9 x 16.5	/	47.5 x 35.5 x 14	320	/	450	0.013
WP24	2G 13A UnSw Skt	18 x 9 x 16.5	/	47.5 x 35.5 x 20	470	/	640	0.033

SAMPLE

Installation Information

Safety Warning

Before use please read carefully and use in accordance with these safety wiring instructions.

Before commencing any electrical work ensure the supply **is switched off at the mains**. Either by switching off the consumer unit or by removing the appropriate fuse.

Wiring should be in accordance with the latest edition of the IEE regulations (BS 7671).

Wire Identification – Twin & Earth Cable

EARTH = Green/Yellow Sleeving

NEUTRAL = Black (pre Apr 04) / Blue (after Apr 04)

LIVE = Red (pre Apr 04) / Brown (after Apr 04)



Technical Helpline: 0845 194 7584
If in doubt consult a competent electrician.

The ends of the individual conductors should have the insulation removed by approx.12mm. Any bare earth conductors should be sleeved to within 12mm of the ends.
(These details are for general information only and conductor lengths may need to be trimmed in certain installations).

Product Application & Features

The Weatherproof Socket range comprises a robust polycarbonate enclosure with durable integrated 1 or 2 gang Switched or Unswitched Sockets. It provides a convenient & safe wall-mounted power point for outdoor equipment such as DIY & garden tools.

The enclosure is IP rated in use, which means that when the front cover is securely closed, the sealed construction provides a very high level of protection against the ingress of both water & dust.

Access to the socket is by means of the hinged front Cover, which for security reasons can also be locked by padlock (not supplied).

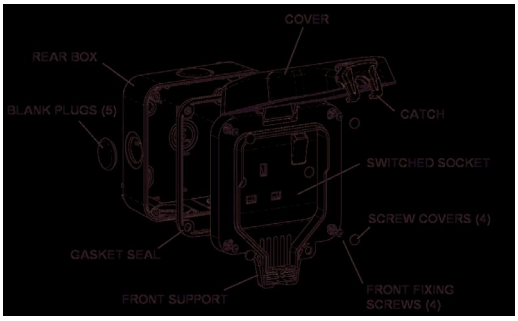

1 GANG SWITCHED SOCKET – EXPLODED VIEW

The Front Assembly comprises Front Support, Switched Socket, Cover & Catch which is mounted to a Rear Box using 4 captive fixing screws. A Gasket Seal is located on the front edge of Rear Box. Re-usable Blank Plugs are pre-fitted & are pushed out from the inside. Screw Covers are provided to hide fixings after installation.

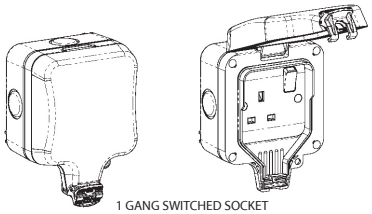

1 GANG SWITCHED SOCKET

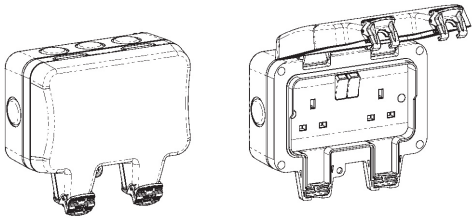

2 GANG SWITCHED SOCKET

Safety Instructions – Important

Please Read 'Changes To Building Regulations'

1. An outdoor location should be chosen ensuring adequate access to a mains supply circuit. The circuit MUST be protected by an appropriate fuse, circuit breaker or RCD (Residual Current Device) in accordance with current IEE wiring regulations.

2. Where conduit is used for cable runs, water condensation MUST be prevented from collecting inside the unit & conduit. Drain holes MUST be drilled out (see Installation Instructions)

3. If metal conduit is used, earth continuity across the conduit must be maintained using appropriate connections (not supplied). An earth terminal in the Rear Box is provided as required. An earth connection from supply circuit MUST be made to earth terminal of socket.

4. Where outdoor cable runs occur, ensure cable recommended for outdoor installations is used. In general, rubber insulated cable & plastic M20 cable glands can be used. Alternatively standard flat PVC twin & earth mains cable inside 20mm plastic or metal conduit may be used. Where necessary, SWA (Steel Wire Armoured) cable with metal cable glands should be used.

The outdoor use of unprotected flat PVC insulated cable is NOT recommended.

5. To ensure continued safe & proper weatherproof operation, the unit MUST not be left with the Cover raised open or the Catch left unlocked. Unused cable entries MUST have Blank Plugs fitted.

Installation Instructions

Ensure Safety Instructions Have Been Read First

Both 1gang & 2 gang Rear Boxes have multiple cable entries on sides & one rear knockout cable entry. Drain hole positions are provided in relation to conduit positions as shown. Note position of earth terminal.

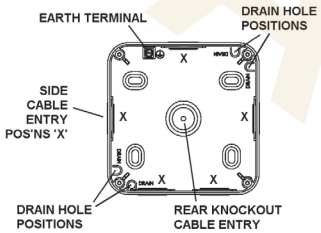

Note

1 gang (as shown) has 4 drain hole & 5 cable entry positions.

2 gang (not shown) has 2 drain hole & 8 cable entry positions.

1. The unit should be mounted on a clean, rigid vertical surface suitable to accept screw type fixings. Surface should be reasonably flat as unevenness could cause product damage or affect operation.

2. Remove fixing screws & remove Front assembly from Rear Box.(If front assembly is fitted to base)

3. For cable entry, decide if conduit is being used & entry positions.

For side, top or rear entry the lowermost drain hole position MUST be drilled out using a 5mm drill. ONLY ONE drain hole position must be drilled.

For bottom entry a drain hole MUST NOT be drilled in Rear Box, but a drain hole MUST be drilled at lowermost point of conduit run.

For rear entry, cut or drill out rear knock-out. For extra sealing protection, a channel around knock-out is provided to accept a bead of sealant (not supplied) when fixing to mounting surface.

Note

The drilling out of a drain hole or removing rear knock-out will reduce the IP rating of the product.

4. Mount the Rear Box using No.8 screws in all four, or at least two diagonal positions on fixing centres shown. The fixing holes are slotted to enable some rotation adjustment if required. Fit supplied Bungs over all used fixing screw positions to seal aperture recesses.

SAMPLE

Installation Information

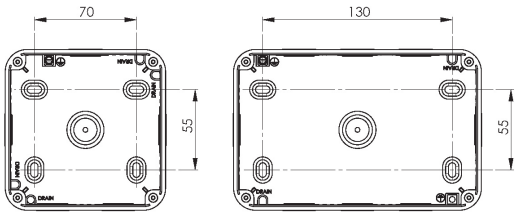

5. Make cable entry into Rear Box as required. Only remove Blank Plugs for positions used. Ensure adequate excess lengths of cable for connection to socket. Install & seal all cable glands & conduit to manufacturer's instructions. Ensure the Gasket Seal is properly fitted over front edge of Rear Box

6. Offer up Front Assembly to Rear Box to determine final lengths of cables & cut to suit. Strip outer insulation as required & then trim insulation on individual wires 10-12mm to expose conductor ends.

7. Connect the wires to the correct socket rear terminals. The socket terminals are colour coded for easier reference:-

Connect LIVE wire to BROWN LIVE (L) terminal

Connect NEUTRAL wire to BLUE NEUTRAL (N) terminal

Connect EARTH wire to GREEN/YELLOW (E) terminal

Note - the colours of the wires will be dependent on the type of cable used. See Wire Identification section for reference.

8. All earth connections MUST be made & continuity maintained. Note - the Socket has two linked earth terminals but only one needs to be used for this installation.

9. Where any earth conductor is a bare wire, it MUST be sleeved with green/Yellow sleeving.

10. Ensure all terminal screws are tight & all wires are neatly routed & not unduly stretched or pinched.

11. After wiring socket, refit Front Assembly onto Rear Box using fixing screws – DO NOT OVERTIGHTEN. Ensure the Gasket Seal is properly fitted over front edge of Rear Box before tightening screws.

12. Fit Screw Covers to complete installation.

13. Switch power back on, check Socket is working & ensure Cover & Catch operate correctly. The product is now ready to use.

14. For security to prevent unwanted tampering with Socket, a lug feature with a 6mm hole is provided to accept a padlock or similar locking security device (not supplied)

15. During life of product, any cleaning should only be carried out with a damp cloth using a mild solution of detergent & warm water. DO NOT USE solvent based cleaners as these may cause damage. It is recommended to ONLY clean the external surfaces with Cover closed. DO NOT get any water on Socket if Cover is open.

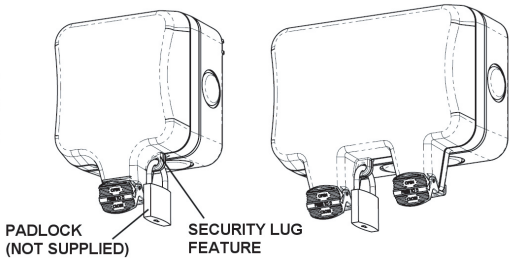

Changes To Building Regulations – Important!

As from 1 January 2005, any electrical work done in domestic, fixed wiring installations in England and Wales, will have to follow new rules & changes to the Building Regulations Part P. These rules have been introduced to help reduce the number of deaths, injuries and fires caused by faulty installations.

The installation work may be carried out by anyone providing it is in accordance with the Regulation standards.

Certain electrical work (non-notifiable or minor work) may be carried out without having to use a registered electrician or notify Local Authority Building Control, such as: -

- replacing any electrical fitting (for example, socket outlets, light fittings, control switches)
- adding fused spurs, sockets or lights to an existing circuit (but not in a kitchen, bathroom or outdoors)
- any repair or maintenance work

For minor work done by a non-qualified electrician, it is highly recommended it is checked by a qualified electrician to ensure it is safe.

For all other work (notifiable or major work) a Building Regulations application is required & it must be checked to make sure it is safe.

This may be done by either an electrician who is part of a competent person self-certification scheme, or by notifying the Local Authority Building Control Department who will make required arrangements.

An application must be made to the Local Authority before commencing work such as: -

- adding a new circuit
- adding/altering any circuit in a room with water (kitchen, bathroom, etc)
- adding/altering any circuit outdoors (outdoor sockets, lights, etc)

Where work is done by a qualified electrician, they will be responsible for checking the work, & Local Authority does not need notification.

Where a qualified electrician or Local Authority is responsible for checking the work, they will provide a certificate or notice to confirm that the installation is tested & safe to use.

IT IS RECOMMENDED TO USE A QUALIFIED ELECTRICIAN

If there is any doubt whether electrical work needs notification of the Local Authority, they should be contacted first for advice.

SAMPLE

4. Manufacturer Product Data Sheets

4.08

Collingwood 5ft Single Anti-Corrosive LED

Source file: Caiman 5ft AC5S (F).pdf

SAMPLE

ANTI-CORROSIVE SPECIFICATION SHEET



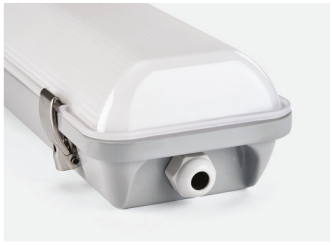



Caiman 5ft Single

5ft Single, anti-corrosive LED

FEATURES

IK rating	IK08
IP rating	IP65
Colour flexibility	Fixed colour
UGR	20
Dimmable	DALI2 available
Input	220-240V
LED Lifetime	50,000h L80 B10
CRI	>80Ra
SDCM	5SDCM
Emergency version available	Yes

INSTALLATION INFORMATION

Install Connector Type	Loop in / Loop out
Inrush Current	Std: 11A, 150µs DALI: 26A, 160µs
Construction Material	PC Stainless Steel
Weight	1713g
Maximum ambient temperature	-20°C to 40°C
SELV	Yes
Building regulations	Part P
Electric Class (1, 2, 3)	1

PHOTOMETRICS @ 25°C

Product code	Feature I	Feature II	Feature III	Wattage	Colour	Beam angle	lm	lm/W	lx @ 1m
AC5SS40	27W Non-Dim	No sensor	Non emergency	28W	4000K	125°x105°	4000	143	1135
AC5SM40	27W Non-Dim	Microwave sensor	Non emergency	28W	4000K	125°x105°	4000	143	1135
AC5SD40	27W DALI2	No sensor	Non emergency	27W	4000K	125°x105°	4000	148	1135
AC5SS40EM	27W Non-Dim	No sensor	Emergency	28W	4000K	125°x105°	4000	143	1135
AC5SM40EM	27W Non-Dim	Microwave sensor	Emergency	28W	4000K	125°x105°	4000	143	1135
AC5SD40EM	27W DALI2	No sensor	Emergency	27W	4000K	125°x105°	4000	148	1135

WIRING INFORMATION

Cable Required for Connector	H05RN-F cable diameter 4 - 10mm, max conductor size 3x 1.5mm²
Type of Wiring Required	Parallel

ACCESSORIES

JB3	Waterproof Junction Box	Sold separately
JB5	Gel filled waterproof junction box	Sold separately

COLLINGWOOD
LIGHTING

01604 495 151
collingwoodlighting.com

@collingwoodLED
/collingwoodlighting
collingwoodled

GUARANTEE / WARRANTY

5 year extended warranty

FEATURES & BENEFITS

Robust fixture made of polycarbonate base and translucent polycarbonate diffuser

Held together with stainless steel clips allowing the removal of the diffuser during installation

Tough exterior provides an IP65+ and IK08+ housing protecting the LED components inside

2x PG11 Compression glands are included to allow the entry/exit of wires without compromising water tightness of the fixture

Mounting clips included

Push fit loop-in loop-out terminals

Built in self-test emergency available. Lumens utput in EM mode = 250lm

Beam angle: 125x105°

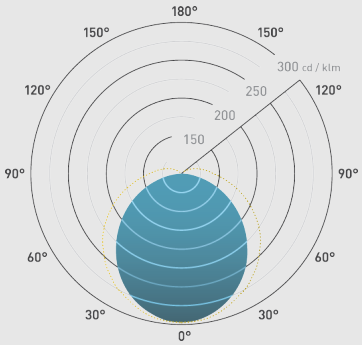

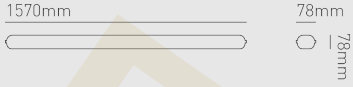

SAMPLE

4. Manufacturer Product Data Sheets

4.09

Collingwood 5ft Twin Anti-Corrosive LED

Source file: Caiman 5ft AC5T((G) - NOT USED.pdf

SAMPLE

ANTI-CORROSIVE SPECIFICATION SHEET







Caiman 5ft Twin

5ft Twin, anti-corrosive LED

FEATURES

IK rating	IK08
IP rating	IP65
Colour flexibility	Fixed colour
UGR	22
Dimmable	DALI2 available
Input	220-240V 50/60Hz
LED Lifetime	50,000h L80 B10
CRI	>80Ra
SDCM	5SDCM
Emergency version available	Yes

INSTALLATION INFORMATION

Install Connector Type	Loop in / Loop out
Inrush Current	Std: 12.6A, 150µs DALI: 26A, 300µs
Construction Material	PC Stainless Steel
Weight	2260.5g
Maximum ambient temperature	-20°C to 40°C
SELV	Yes
Building regulations	Part P
Electric Class (1, 2, 3)	1

PHOTOMETRICS @ 25°C

Product code	Feature I	Feature II	Feature III	Wattage	Colour	Beam angle	lm	lm/W	lx @ 1m
AC5TS40	50W Non-Dim	No sensor	Non emergency	50W	4000K	125°x105°	7000	140	2159
AC5TM40	50W Non-Dim	Microwave sensor	Non emergency	50W	4000K	125°x105°	7000	140	2159
AC5TD40	50W DALI2	No sensor	Non emergency	50W	4000K	125°x105°	7000	140	2159
AC5TS40EM	50W Non-Dim	No sensor	Emergency	50W	4000K	125°x105°	7000	140	2159
AC5TM40EM	50W Non-Dim	Microwave sensor	Emergency	50W	4000K	125°x105°	7000	140	2159
AC5TD40EM	50W DALI2	No sensor	Emergency	50W	4000K	125°x105°	7000	140	2159

WIRING INFORMATION

Cable Required for Connector	H05RN-F cable diameter 4 - 10mm, max conductor size 3x 1.5mm²
Type of Wiring Required	Parallel

ACCESSORIES

JB3	Waterproof Junction Box	Sold separately
JB5	Gel filled waterproof junction box	Sold separately

COLLINGWOOD
LIGHTING

01604 495 151
collingwoodlighting.com

/collingwoodlighting
/collingwoodlighting
collingwoodled

GUARANTEE / WARRANTY

5 year extended warranty
2 year guarantee on emergency unit
2 year on-site guarantee

FEATURES & BENEFITS

Robust fixture made of polycarbonate base and translucent polycarbonate diffuser

Held together with stainless steel clips allowing the removal of the diffuser during installation

Tough exterior provides an IP65 and IK08 housing protecting the LED components inside

2x PG11 Compression glands are included to allow the entry/exit of wires without compromising water tightness of the fixture

Mounting clips included

Push fit loop-in loop-out terminals

Built in self-test emergency available. Lumens utput in EM mode = 250lm

MW sensing range adjustable, up to 6m high, 14m diameter

Light source energy efficiency: A to G — B

Beam angle: 120x105°

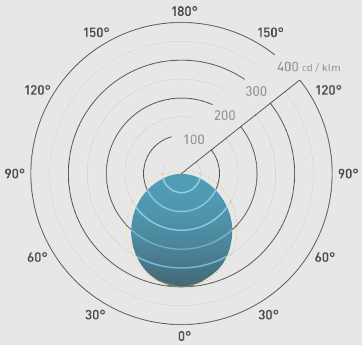

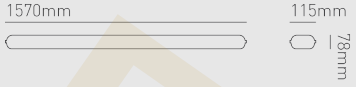

SAMPLE

4. Manufacturer Product Data Sheets

4.10

Calpeda CAT5 AGAP Booster Set

Source file: Calpeda Cat 5 BTM 61E AGAP 18 Booster Set.pdf

SAMPLE

CAT 5 AGAP Systems

With Easymat & IDROMAT Control

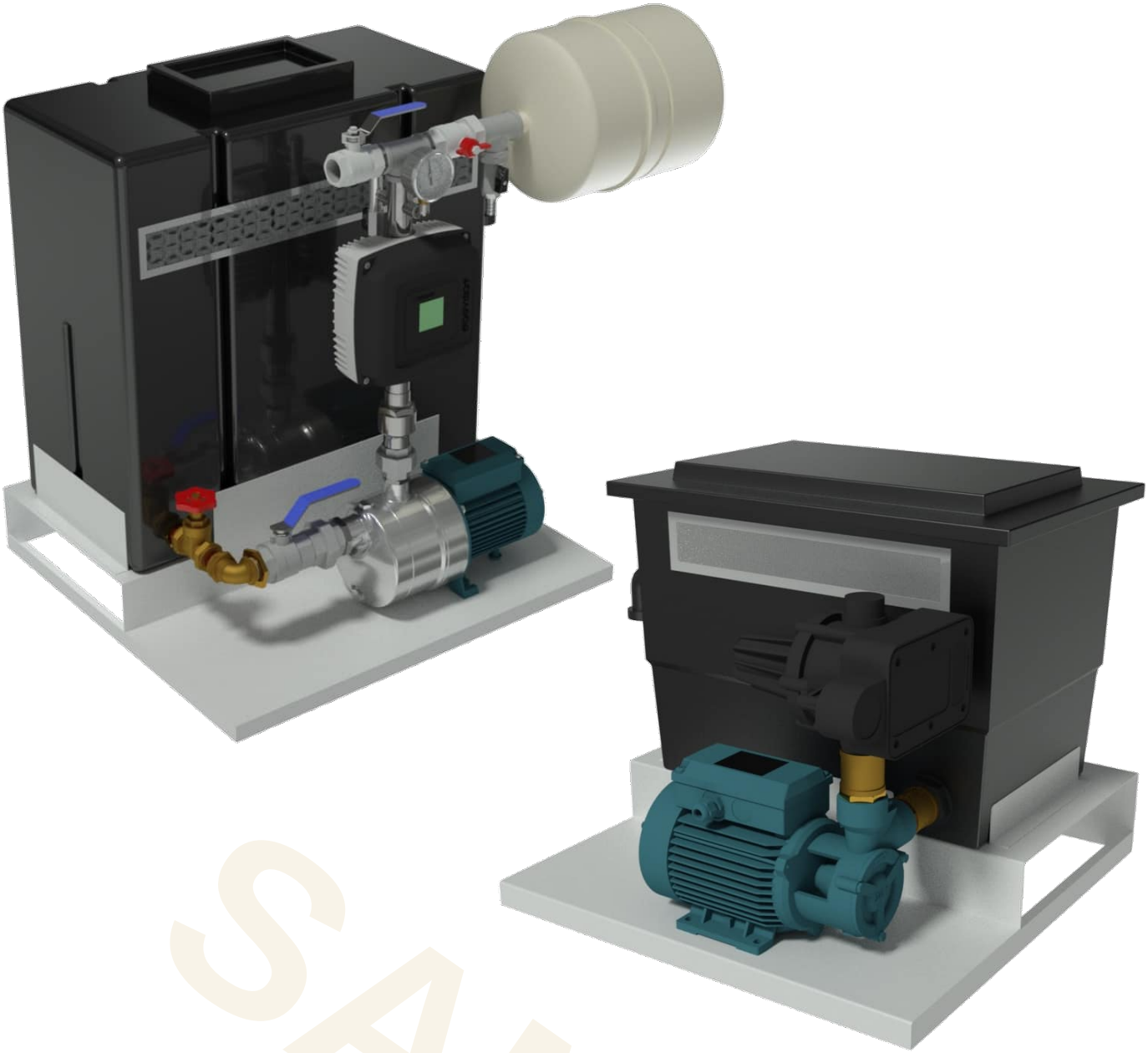

MXH Series

Approval Number 1404327

SAMPLE

AGAP SETS

General:

A range of economically priced, fixed or variable speed AGAP sets with 18 and 80 litre nominal capacity tanks. Options for the sets to feature the Easymat variable speed controller or our IDROMAT flow controller.

Pumps:

MXH Series: Stainless steel, horizontal, multistage centrifugal pumps. WRAS Approved.

BT Series: Bronze / brass, peripheral pumps.

Operating Conditions:

Fluid:	Clean cold water
Fluid temp.:	Max 25ºC
Air ambient temp.:	Max 40ºC
Max pressure:	10 Bar operational
Control:	Easymat variable speed control or IDROMAT fixed speed flow controller
Rated:	Continuous service

SAMPLE

MXH Series

WRAS APPROVED PRODUCT

Approval Number 1404327

FEATURES

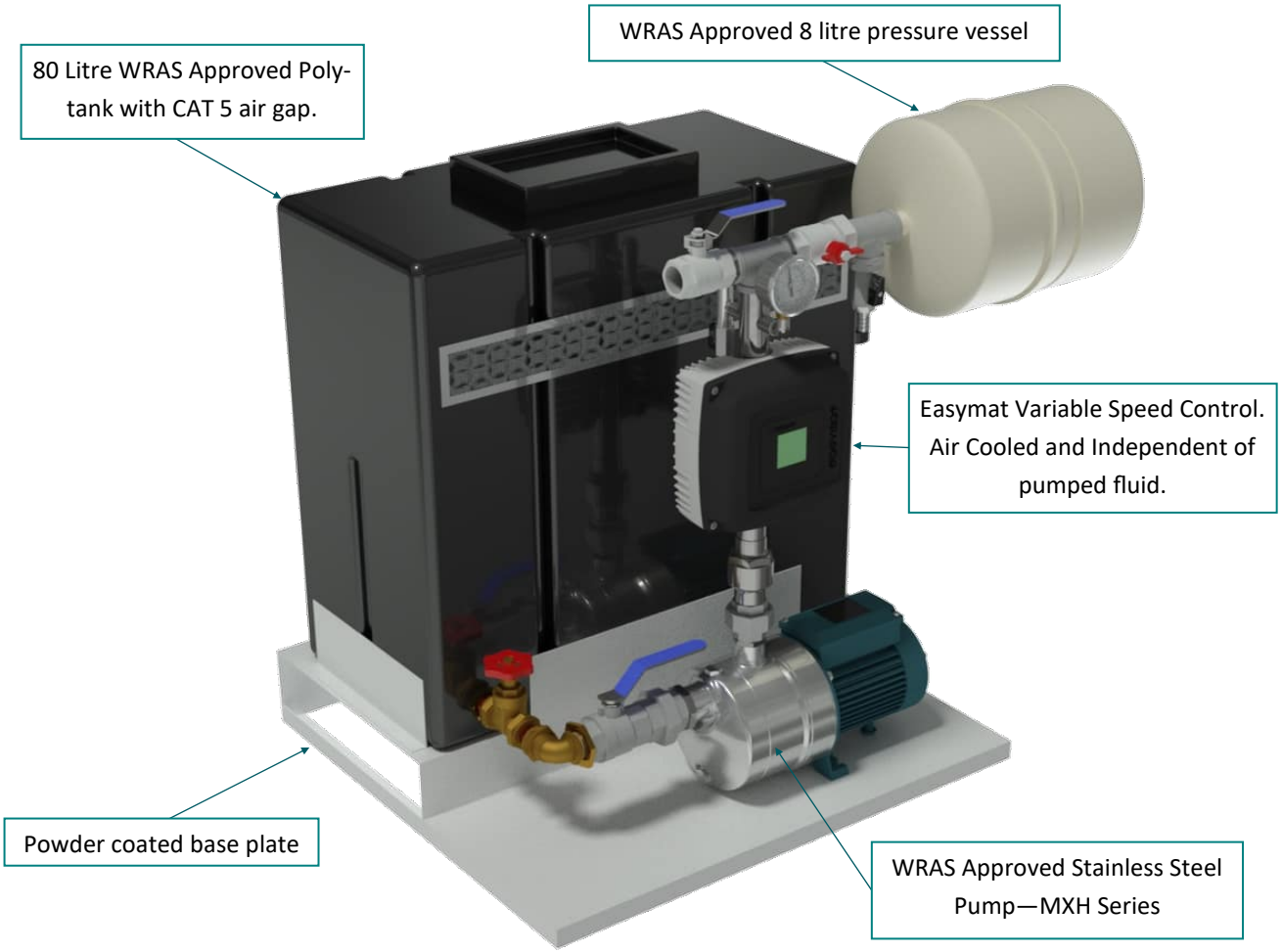
WRAS Approved 8 litre pressure vessel
80 Litre WRAS Approved Poly-tank with CAT 5 air gap.
Easymat Variable Speed Control. Air Cooled and Independent of pumped fluid.
Powder coated base plate
WRAS Approved Stainless Steel Pump—MXH Series

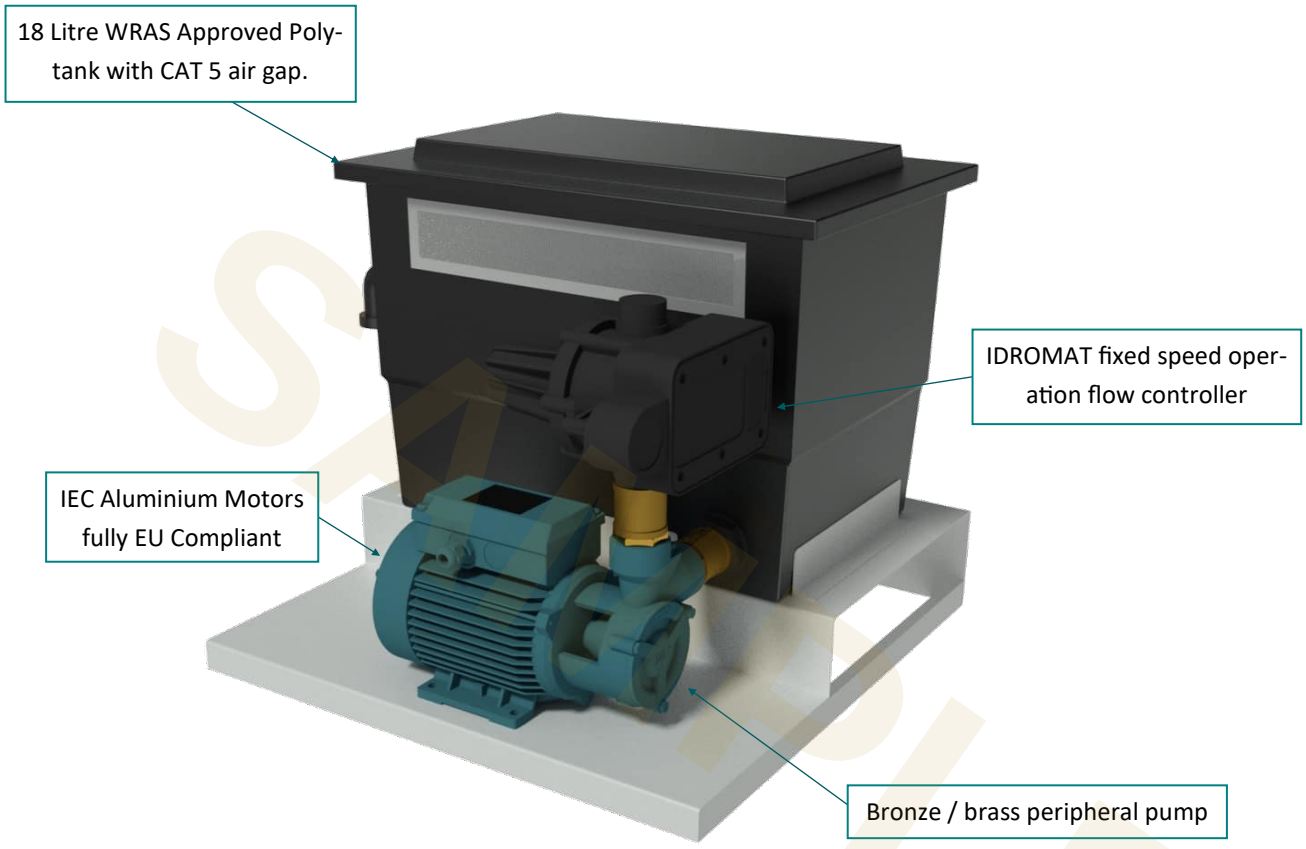
18 Litre WRAS Approved Poly-tank with CAT 5 air gap.
IDROMAT fixed speed oper-ation flow controller
IEC Aluminium Motors fully EU Compliant
Bronze / brass peripheral pump

EASYMAT CONTROL

Control Panel

The Easymat is equipped with a control panel for simple system programming and parameter monitoring.
The 2 scroll buttons are used to scroll through the different operating parameters the Easymat can display.
At the same time you can use the 2 scroll buttons to move around the set up menu and to change the various options.
The custom LCD display gives a clear overview of the system condition and operating parameters. The icons above and below the display confirm the mode in which the Easymat is working and highlight any problems.
The 4 set-up buttons allow the operator to move between the set-up menus and to start and stop the pump/s. The symbols are designed to make the various function of each button clear. With these 4 buttons and the two scroll buttons you can manage all the set-up and operating parameters without the use of an external controller or computer.



LCD Display

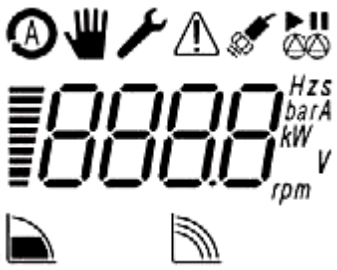

The integrated LCD custom display gives you an easy overview of the system condition and operating parameters.



Display Area. The display area shows the status of the parameters of the pump.

The **Operating Icons** show in which mode the system is operating.

Constant pressure mode.
The system keeps the pressure constant as the demand for water changes. The user can choose the operating pressure as required.

Fixed speed mode.
The system works at a fixed speed which can be determined by the user as required.

The **System Icons** show in which way the system is operating.

Auto mode.
The icon shows that the system is operating in auto mode (constant pressure). The constant pressure icon will be shown on the lower section of the display.

Manual mode.
The icon shows that the system is operating in manual mode (fixed speed). With the navigation buttons the user can change the speed. The fixed speed icon will be shown on the lower section of the display.

Set-up mode.
The icon shows that the set-up menu is activated, in this mode it is possible to change all the operating parameters of the Easymat . Using the navigation buttons it is possible to scroll through the parameters and change them as required.

Sensor state.
This indicates the state of the pressure transducer connected to the Easymat. When lit it indicates that the transducer is working correctly, if flashing it indicates a transducer fault or incorrect connection.

Alarm. This indicates that there is a fault on the system. A corresponding error number will be shown on the display.

SAMPLE

IDROMAT CONTROL

Description

Construction

Regulation device for pump control equipped with flow and pressure sensor connected to an electronic system.

Inlet and delivery connection ports of the same diameter (G1).

Built-in check valve.

Pressure gauge 0-12 bar supplied as standard for all the models.

Automatic reset function for the reset of the system without manual operation.



Applications

Automatic control of pumps for water supply and increase of network pressure. **Control of starting/stopping of the pump** when cocks are opened/closed.

For protection of the pump:

– against dry running;

– against the risk of operation without water at the inlet (caused by a lack of water inflow in the inlet pipe under positive suction head, by a non-immersed suction pipe, by excessive suction lift or by air entering the suction pipe); – against operation with closed connection ports.

Control Panel



Status indications and system reset

The three LEDs give the information about the system operativity, the first LED indicates the presence of supply, the second LED indicates if the pump is operating and the third LED indicates if an alarm has occurred in the system. The Reset button allows to manually restart the system when an alarm occurs.

Features

Flexibility

The standard double supply voltage (only for Idromat 5) allows to connect power supply of 115V or 230V without modifications on the device.

Easy to use

With the Idromat 5e it is possible to change the re-start pressure, the operation is possible also with the pump that operate.

Safety

The device includes a automatic re-start system with anti-lock mode in order to reduce the user operations.

Reliability

The pressure gauge locking system (patented) allows an easy replacement in case of failure and an easy drainage of the device.

User Friendly

The high luminosity LEDs allows a higher visibility of the operating conditions.

SAMPLE

MXH SERIES

Performance Data

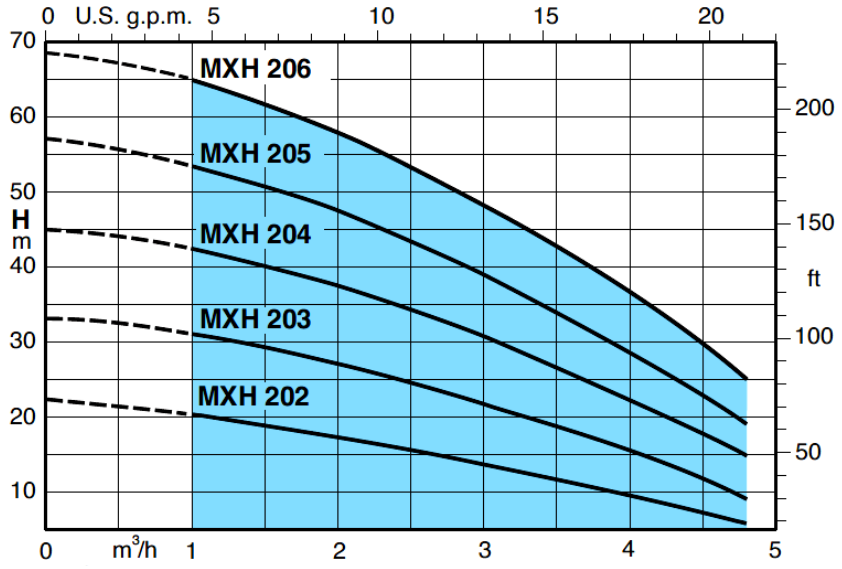

MXH Series

WRAS APPROVED PRODUCT

Approval Number 1404327

1 ~	230 V	P1	P2		Q m³/h	0	1	1,5	2	2,5	3	3,5	4	4,25	4,8
	A	kW	kW	HP	l/min	0	16,6	25	33,3	41,6	50	58,3	66,6	70,8	80
MXHM 202E	2,3	0,5	0,33	0,45	H m	22	20	18,5	17	15,3	13,4	11,4	9,3	8,2	5,6
MXHM 203E	3	0,65	0,45	0,6		33	31	29	27	24,5	21,7	18,6	15,5	13,8	9
MXHM 204/A	4,2	0,9	0,55	0,75		45	42,5	40,4	37,5	34,5	30,8	26,7	22,4	20,1	14,8
MXHM 205/A	5,4	1,2	0,75	1		57	53,5	50,5	47,5	43,5	39	34	28,5	25,8	19
MXHM 206	7,4	1,5	1,1	1,5		68,5	65	61,5	58	53,5	48	43	36,5	33,5	25

Materials

Constructed fully of stainless steel fitted with carbon/ceramic/EPDM mechanical seal.

Motor

Capacitor inside the terminal box.

Insulation class F. Protection IP 54.

Motor suitable for operation with frequency converter from 1,8 kW.

Classification scheme IE3 for three-phase motors from 0,75 kW.

Features

Extra safety

Against running dry, with the suction port above pump axis.

Reliable

All hydraulic parts in contact with the pumped liquid are of stainless steel.

For liquids from -15 °C to 110 °C.

Robust

Single-piece, thick barrel casing.

Compact

Single-piece lantern bracket and base without protruding flange.

Greater protection

Against leakage, with the pump casing cover separated from the motor shield.

Possibility of inspecting the seal through the side apertures between the two walls.

Greater protection against water entering the motor from outside provided by an extension of the pump casing around the lantern bracket.

SAMPLE

T SERIES

Performance Data

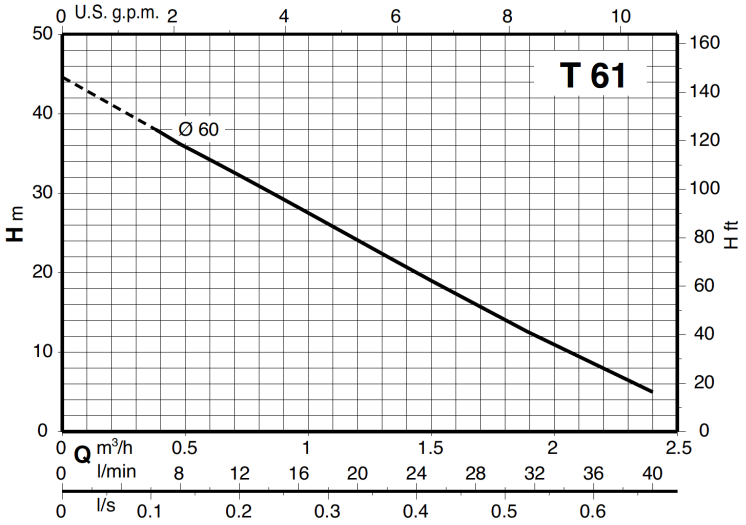

1 ~	230V	P1	P2	
	A	kW	kW	HP
B-**TM 61E**	2,5	0,55	0,33	0,45

Q m³/h	0,06	0,12	0,24	0,38	0,48	0,6	0,75	1	1,2	1,5	1,89	2,4	3
l/min	1	2	4	6,3	8	10	12,5	16	20	25	31,5	40	50
				38	36	34	31,5	28	24	19	12,5	5	

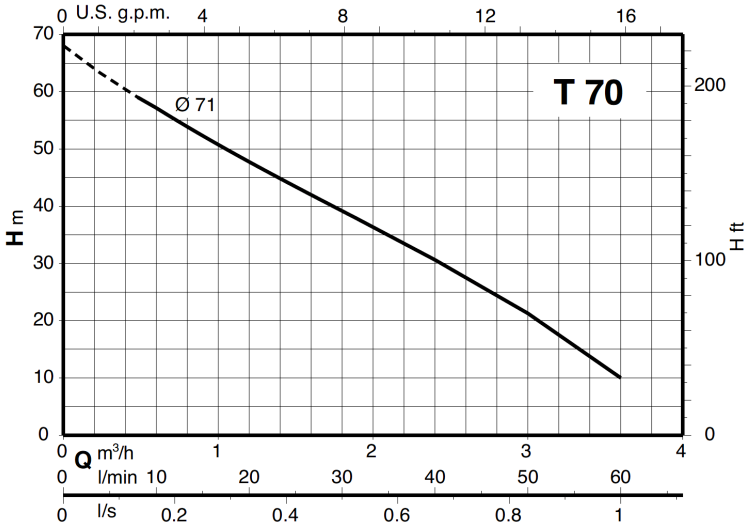

1 ~	230V	P1	P2	
	A	kW	kW	HP
B-**TM 70/A**	6	1,3	0,75	1

Q m³/h	0,06	0,12	0,24	0,38	0,48	0,6	0,75	1	1,2	1,5	1,89	2,4	3	3,6	4,2
l/min	1	2	4	6,3	8	10	12,5	16	20	25	31,5	40	50	60	70
					59	57	55	51	48	43	38	30	22	10	

Materials

Constructed from bronze / brass and fitted with carbon/ceramic/NBR mechanical seal.

Motor

Capacitor inside the terminal box.

Insulation class F. Protection IP 54.

Classification scheme IE3 for three-phase motors from 0,75 kW.

Constructed in accordance with: EN 60034-1; EN 60034-30, EN 60335-1, EN 60335-2-41.

Features

Range

The number of pumps in the range can meet a range of services required by the user.

Reliable

The bearing and shaft are designed to ensure the reduction of the stress, providing high reliability under all operating conditions.

Optimised hydraulics

The pump hydraulics are designed to ensure high performance and consistency of performance.

SAMPLE

DIMENSIONS

BTM61E-AGAP18

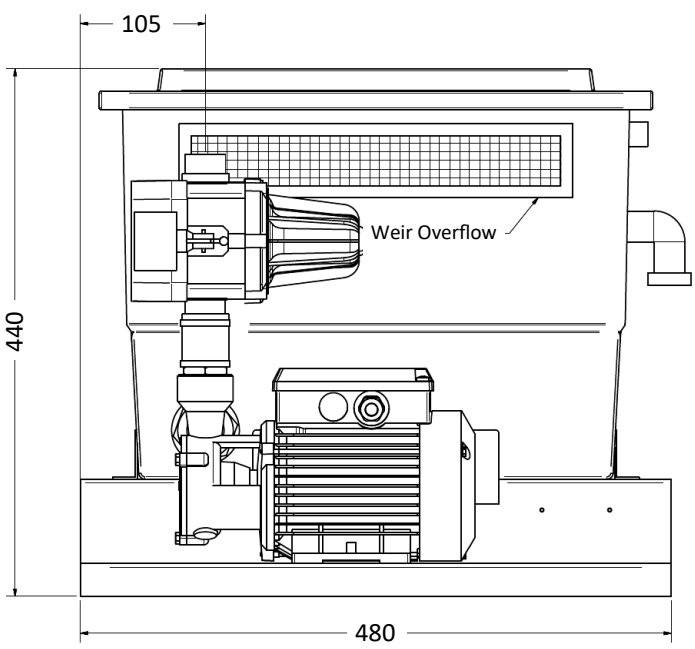

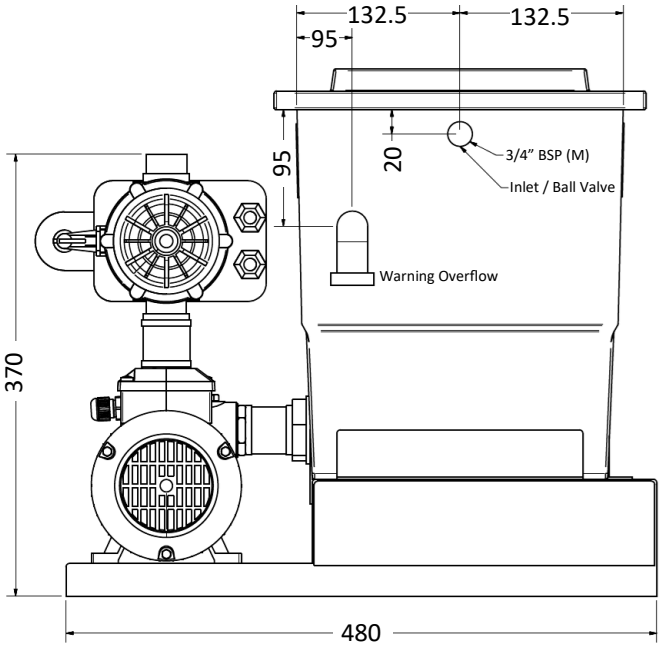

BTM61E-AGAP80

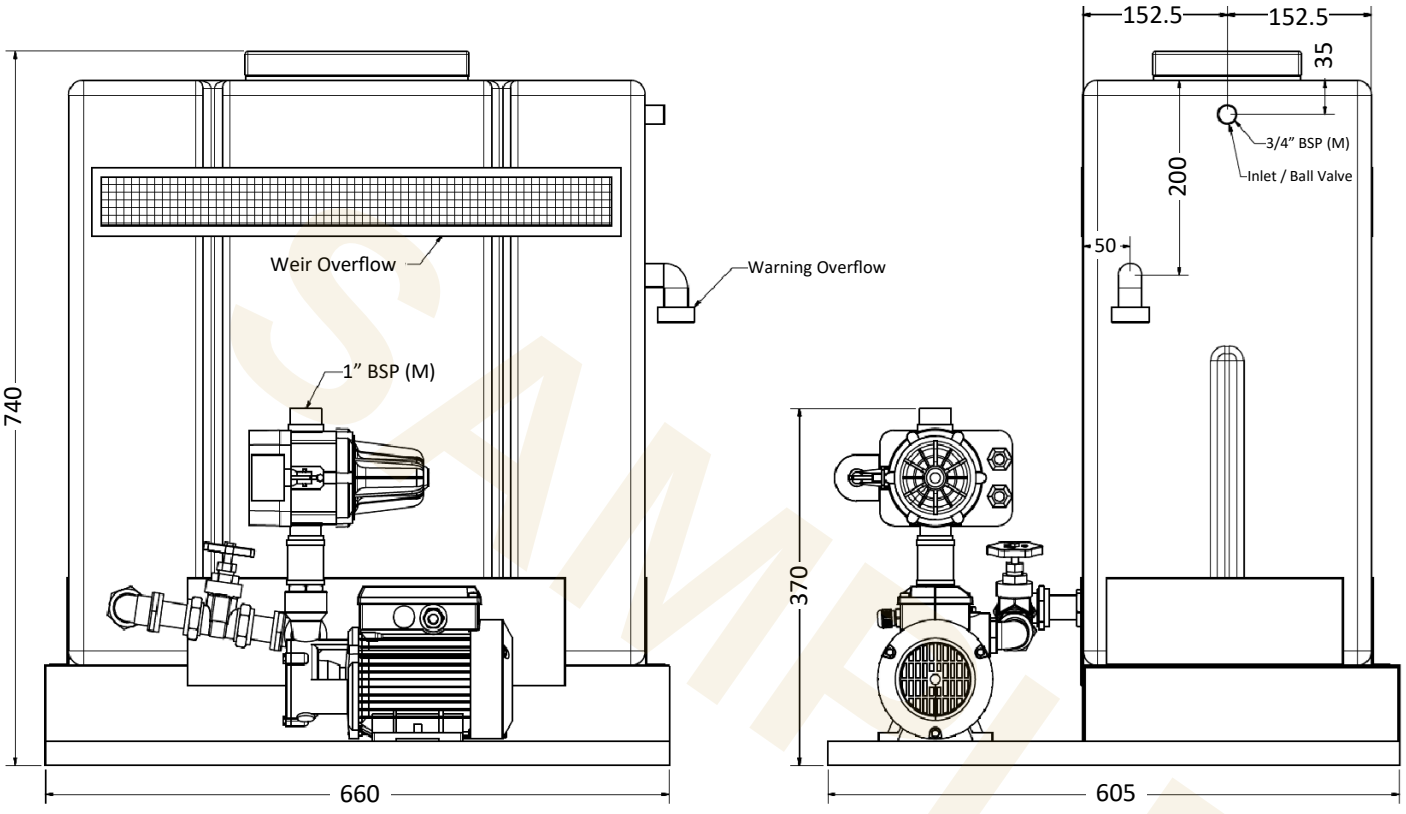

SAMPLE

DIMENSIONS *(continued)*

BTM70/A-AGAP80

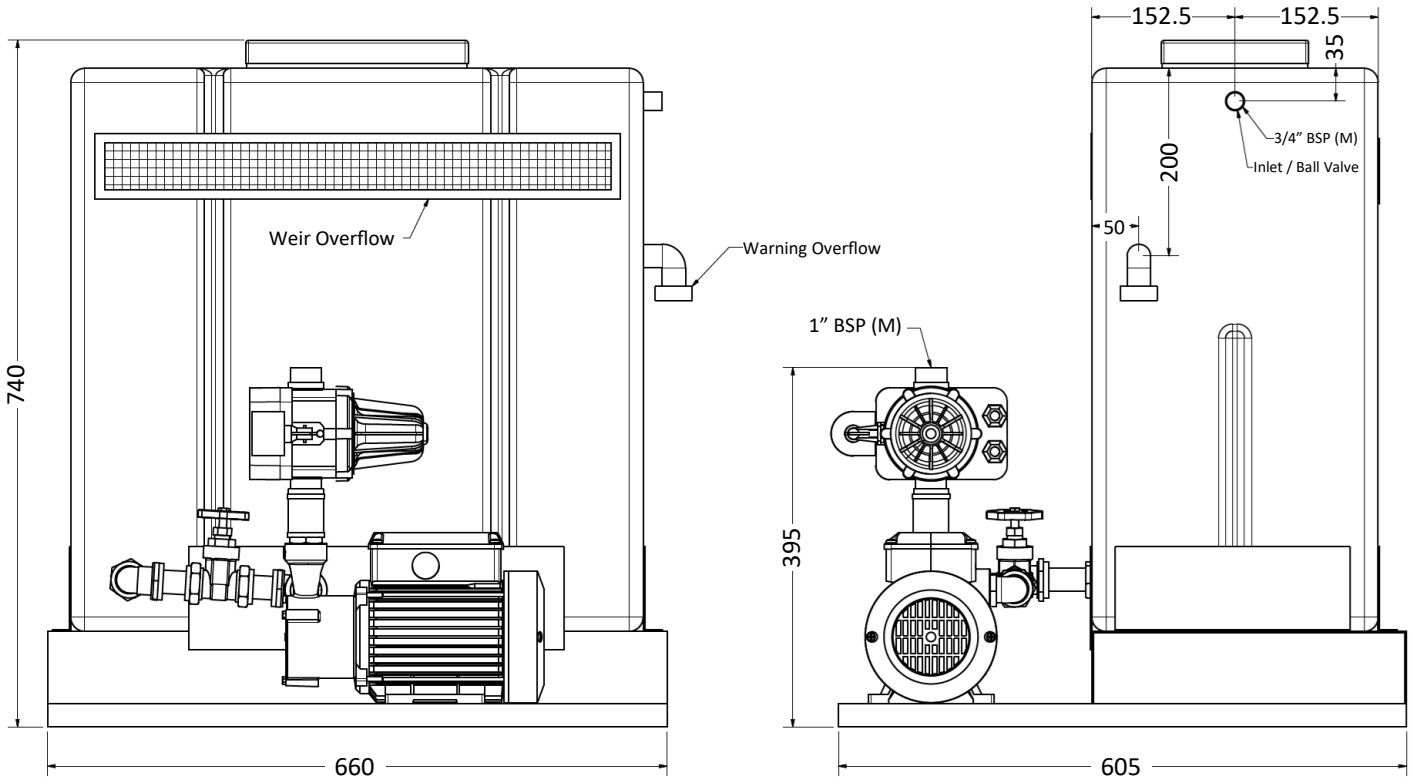

MXHM20...-AGAP80

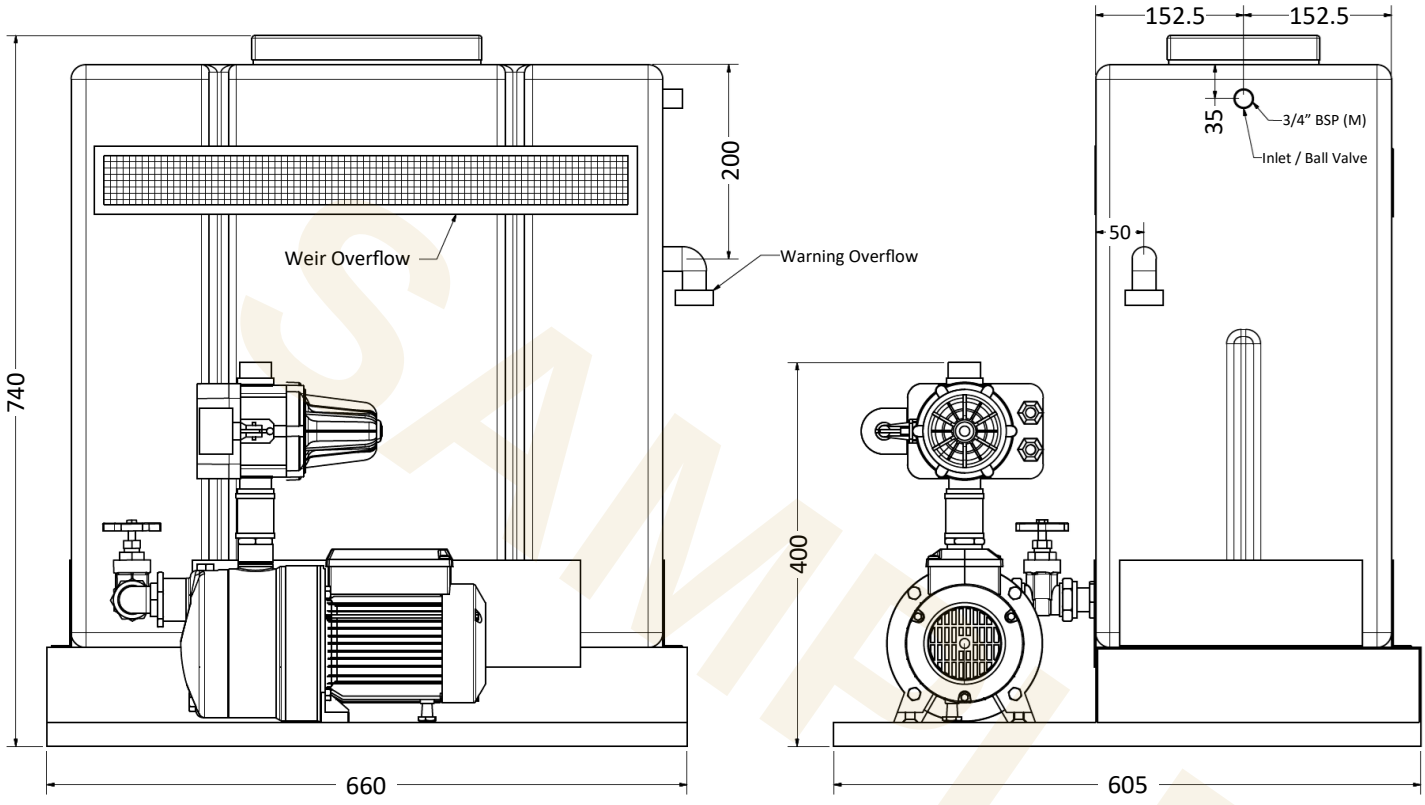

SAMPLE

DIMENSIONS *(continued)*

1MXH20...-EMT-8-AGAP80

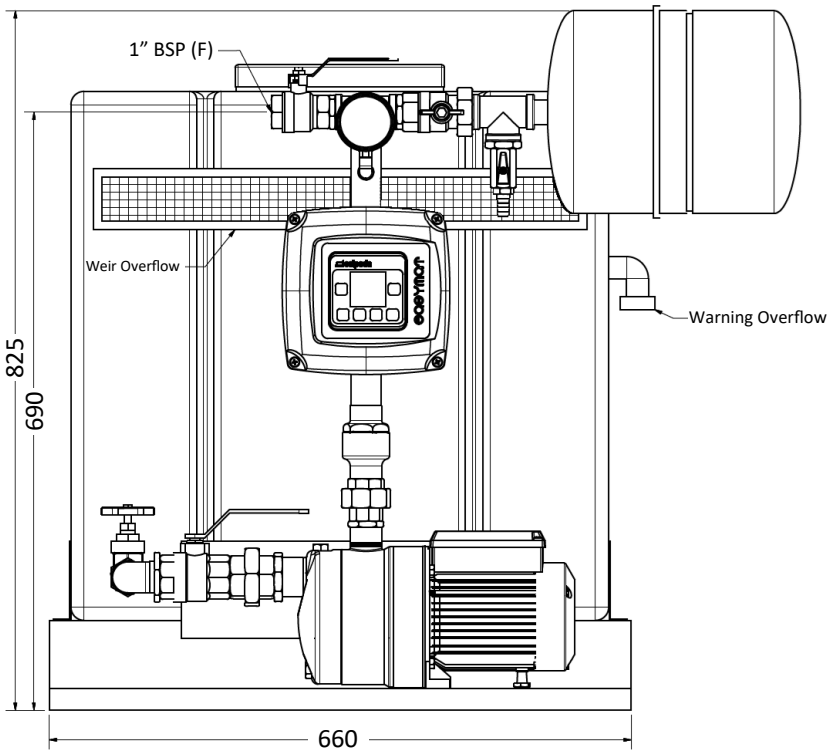

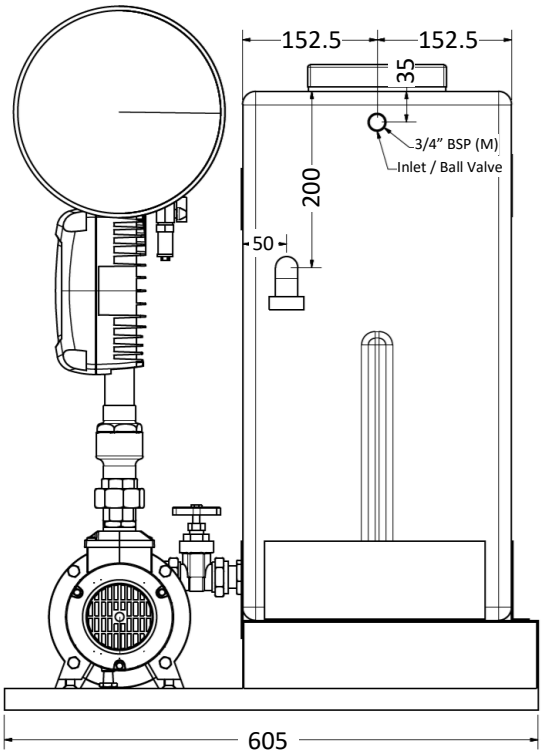

SAMPLE

Notes

SAMPLE

Notes







Calpeda Limited

Head Office

Unit 6-8, Wedgwood Road Industrial Estate, Bicester, Oxfordshire. OX26 4UL
T: 01869 241441 **F**: 01869 240681 **E**: pumps@calpeda.co.uk **W**: www.calpeda.co.uk

UK Technical and Training Centre

Grove House, Friarwood Lane, Pontefract, West Yorkshire. WF8 1DX
T: 01869 241441 **F**: 01977 709485 **E**: pumps@calpeda.co.uk **W**: www.calpeda.co.uk

calpeda®

SAMPLE

4. Manufacturer Product Data Sheets

4.11

Collingwood 16W Commercial Downlight

Source file: CDL0116 Round Luminaires (D).pdf

SAMPLE

COMMERCIAL DOWNLIGHTS SPECIFICATION SHEET





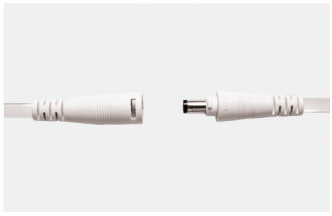

THEA 16W

Colour switchable, dimmable, plug & play commercial downlight

FEATURES

IP rating	IP54
Colour flexibility	Colour switchable
Tiltable	No
UGR	UGR 29
Sensor	No
Dimmable	Yes
Input	220-240V 50/60Hz
LED Lifetime	50,000h L70 B50
CRI	>80Ra
SDCM	5SDCM
Emergency version available	Yes

INSTALLATION INFORMATION

Install Connector Type	Plug and play connector
Insulation Coverable	No
Cut Out Size	150mm
Bathroom zone	2
Inrush Current	1.7A 0.017ms
Construction Material	Aluminium
Maximum ceiling thickness	20mm
Weight	484g
Maximum ambient temperature	40°C
SELV	Yes
Building regulations	P and L
Electric Class (1, 2, 3)	2

PHOTOMETRICS @ 25°C

Product code	Finish	Feature I	Wattage	Colour	Beam angle	lm	lm/W	EM lm
CDL0116M	Matt white	Mains	16W	3000K	100°	1600	100	220lm
CDL0116M	Matt white	Mains	16W	4000K	100°	1700	106	220lm
CDL0116M	Matt white	Mains	16W	6500K	100°	1700	106	220lm
CDL0116D	Matt white	DALI	16W	3000K	100°	1600	100	220lm
CDL0116D	Matt white	DALI	16W	4000K	100°	1700	106	220lm
CDL0116D	Matt white	DALI	16W	6500K	100°	1700	106	220lm
CDL0116V	Matt white	1-10V	16W	3000K	100°	1600	100	220lm
CDL0116V	Matt white	1-10V	16W	4000K	100°	1700	106	220lm
CDL0116V	Matt white	1-10V	16W	6500K	100°	1700	106	220lm

WIRING INFORMATION

Cable / Flying Lead	0.5-2.5mm²
Type of Wiring Required	Parallel

LED DRIVER

Product code	Input	SELV	Dimming	Bathroom zone	Min	Max
N/A (Integrated SELV driver)	220-240V	Yes	Yes (Mains)	2 (Ceiling only)	N/A	N/A

ACCESSORIES

LEDEP10	3 hour non-maintained self-test emergency pack

SAMPLE

COLLINGWOOD
LIGHTING

01604 495 151
collingwoodlighting.com

/collingwoodlighting
/collingwoodlighting
collingwoodled

GUARANTEE / WARRANTY

5 year extended warranty

FEATURES & BENEFITS

Colour switchable for ultimate flexibility

Highly Efficient

Plug and play connector on driver for easy installation to luminaire

Mains dimmable as standard

Lumens in EM mode: 220lm

Light source energy efficiency: D

Beam angle: 100°

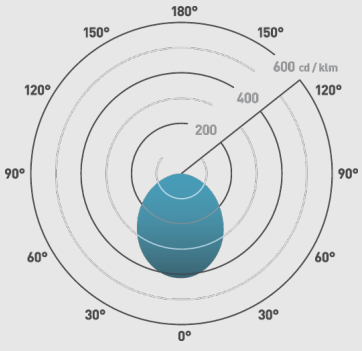

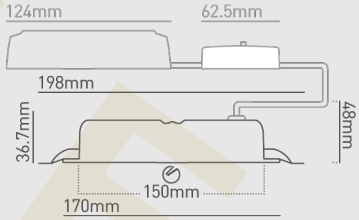

4. Manufacturer Product Data Sheets

4.12

Collingwood 24W Commercial Downlight

Source file: CDL0124 Round Luminaires (DI).pdf

SAMPLE

COMMERCIAL DOWNLIGHTS SPECIFICATION SHEET





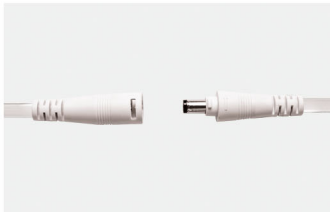

THEA 24W

Colour switchable, dimmable, plug & play commercial downlight

FEATURES

IP rating	IP54
Colour flexibility	Colour switchable
Tiltable	No
UGR	UGR 30
Sensor	No
Dimmable	Yes
Input	220-240V 50/60Hz
LED Lifetime	50,000h L70 B50
CRI	>80Ra
SDCM	5SDCM
Emergency version available	Yes

INSTALLATION INFORMATION

Install Connector Type	Plug and play connector
Insulation Coverable	No
Cut Out Size	200mm
Bathroom zone	2
Inrush Current	2.3A 0.009ms
Construction Material	Aluminium
Maximum ceiling thickness	20mm
Weight	703g
Maximum ambient temperature	40°C
SELV	Yes
Building regulations	P and L
Electric Class (1, 2, 3)	2

PHOTOMETRICS @ 25°C

Product code	Finish	Feature I	Wattage	Colour	Beam angle	lm	lm/W	EM lm
CDL0124M	Matt white	Mains	24W	3000K	100°	2600	108	220lm
CDL0124M	Matt white	Mains	24W	4000K	100°	2800	117	220lm
CDL0124M	Matt white	Mains	24W	6500K	100°	2800	117	220lm
CDL0124D	Matt white	DALI	24W	3000K	100°	2600	108	220lm
CDL0124D	Matt white	DALI	24W	4000K	100°	2800	117	220lm
CDL0124D	Matt white	DALI	24W	6500K	100°	2800	117	220lm
CDL0124V	Matt white	1-10V	24W	3000K	100°	2600	108	220lm
CDL0124V	Matt white	1-10V	24W	4000K	100°	2800	117	220lm
CDL0124V	Matt white	1-10V	24W	6500K	100°	2800	117	220lm

WIRING INFORMATION

Cable / Flying Lead	0.5-2.5mm²
Type of Wiring Required	Parallel

LED DRIVER

Product code	Input	SELV	Dimming	Bathroom zone	Min	Max
N/A (Integrated SELV driver)	220-240V	Yes	Yes (Mains)	2 (Ceiling only)	N/A	N/A

ACCESSORIES

DL801MW	Converter plate	Sold Separately
LEDEP10	3 hour non-maintained self-test emergency pack	Sold separately

COLLINGWOOD
LIGHTING

01604 495 151
collingwoodlighting.com

/collingwoodlighting
/collingwoodlighting
collingwoodled

GUARANTEE / WARRANTY

5 year extended warranty

FEATURES & BENEFITS

Colour switchable for ultimate flexibility

Highly Efficient

Plug and play connector on driver for easy installation to luminaire

Mains dimmable as standard

Lumens in EM mode: 220lm

Beam angle: 100°

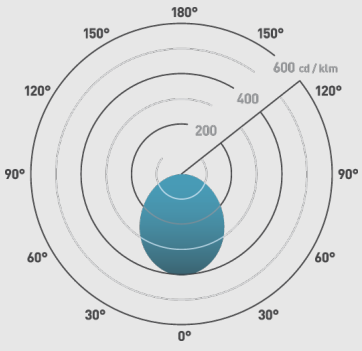

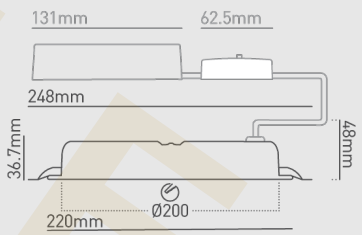

SAMPLE

4. Manufacturer Product Data Sheets

4.13

JCC Single Circuit Track Section Black

Source file: Datasheet_[JC14003BLK]Single Circuit Track_(08-Jul-2022).pdf

SAMPLE

JC14003BLK

Single Circuit Track

Mainline Mains IP20 2340mm Track Section Black



Features & Benefits

- Mainline Single circuit track sections
- Track can be cut to required length
- Suitable for all JCC Single circuit track fittings

2yr WARRANTY | CLASS I | IP 20 RATING

General Information

Mounting	**Surface Mounted**
Product Group	**Single Circuit Track & Spot**
Trade Name	**Mainline Track**
Color Finish	**Black**
Product Shape	**Rectangular**
Overall Dimensions	**L 2340mm W 36mm D 17mm**
Product Weight(kg)	**1.55**
Recommended Product Location	**Indoor use only**
IP Rating	**IP20**
Origin of manufacturer	**Made in Taiwan**
Warranty	**2 year standard warranty (See Website for terms and conditions)**
Lighting Product Type 1	**Accessory**

Electrical

Class	**I**
Dimmable	**no**

Construction

Primary Material	**Steel**

Packaging

SAMPLE

Product Bar Code EAN-13 Number	**5052544004667**

Standards & Approvals

Manufactured In Accordance To	**BS EN 60598-2-1**
CE Marked	**yes**
UKCA Marked	**Yes**
Date code/Purchase order No.	**Yes**
Certificate Of Conformity	**Available on request**
Accredited Members	**LIA, ISO9001-2015, ISO14001-2015**

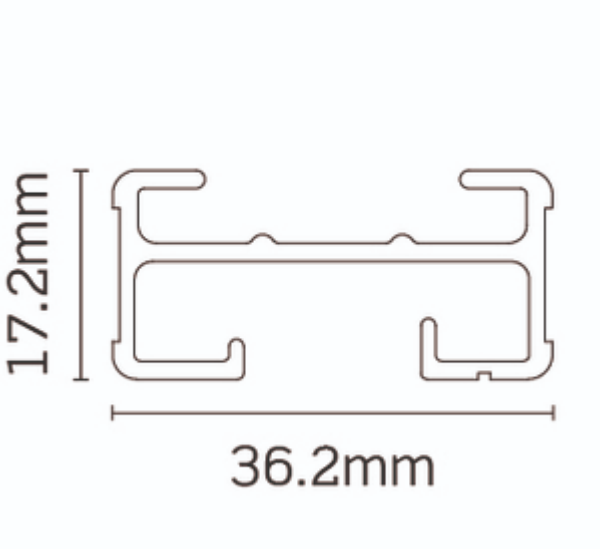

JCC Lighting LTD Innovation Centre, Beeding Close, Southern Cross Trading Estate, Bognor Regis, West Sussex PO22 9TS
Sales: 01243 838999 (8am to 5pm Monday to Friday) Fax: 01243 838998 | sales@jcc.co.uk | www.jcc.co.uk
Company Registration Number: 03044848 | VAT Number: 918544112

SAMPLE

4. Manufacturer Product Data Sheets

4.14

JCC Single Circuit Track Live End

Source file: Datasheet_[JC14009BLK]Single Circuit Track Accessories_(08-Jul-2022).pdf

SAMPLE

JC14009BLK

Single Circuit Track Accessories

Mainline Mains IP20 120mm Live End With Conduit Entry Black

Features & Benefits

- Range of accessories available
- 16 amp max
- IP20 protection
- Available in black or white



2yr WARRANTY

CLASS I

IP 20 RATING

General Information

Mounting	**Surface Mounted**
Product Group	**Single Circuit Track & Spot**
Trade Name	**Mainline Track**
Color Finish	**Black**
Product Shape	**Rectangular**
Overall Dimensions	**160 x 37mm**
Product Weight(kg)	**0.131**
Recommended Product Location	**Indoor use only**
IP Rating	**IP20**
Origin of manufacturer	**Made in Taiwan**
Warranty	**2 year standard warranty (See Website for terms and conditions)**
Lighting Product Type 1	**Accessory**

Electrical

Class	**I**

SAMPLE

Packaging

Product Bar Code EAN-13 Number	**5052544004865**

Standards & Approvals

Manufactured In Accordance To	**BS EN 60570-2003**
CE Marked	**yes**
UKCA Marked	**Yes**
Date code/Purchase order No.	**Yes**
Certificate Of Conformity	**Available on request**
Accredited Members	**LIA, ISO9001-2015, ISO14001-2015**

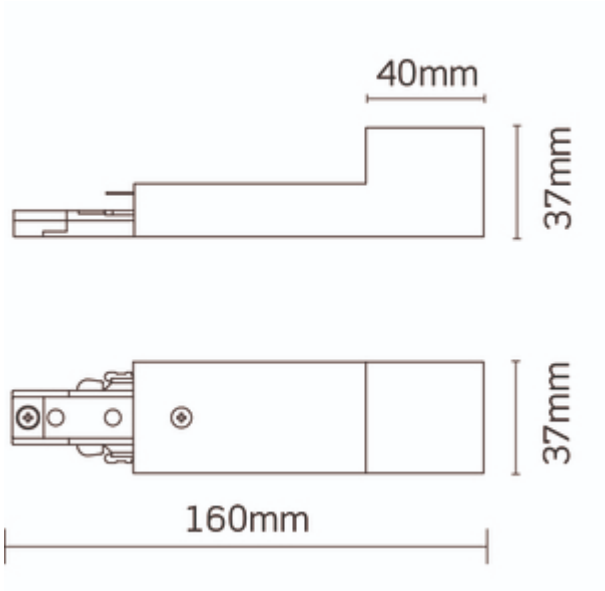

JCC Lighting LTD Innovation Centre, Beeding Close, Southern Cross Trading Estate, Bognor Regis, West Sussex PO22 9TS
Sales: 01243 838999 (8am to 5pm Monday to Friday) Fax: 01243 838998 | sales@jcc.co.uk | www.jcc.co.uk
Company Registration Number: 03044848 | VAT Number: 918544112

SAMPLE

4. Manufacturer Product Data Sheets

4.15

JCC Track Spotlight Black

Source file: Datasheet_[JC14032BLK]Standard Spotlight_(08-Jul-2022).pdf

SAMPLE

JC14032BLK

Standard Spotlight

Mainline Standard Mains IP20 Track Spotlight HiSpot ES50 50W GU10
Black



Features & Benefits

- 50W halogen track spotlights
- Available in black
- silver or white
- Lamp not included

2yr WARRANTY | CLASS I | IP 20 RATING

General Information

Mounting	**Surface Mounted**
Product Group	**Halogen - Track**
Trade Name	**Mainline Track**
Color Finish	**Black**
Product Shape	**Cylinder**
Overall Dimensions	**90 x 128mm**
Product Weight(kg)	**0.2**
Recommended Product Location	**Indoor use only**
Lamp Supplied	**No (QPAR16 50W GU10)**
IP Rating	**IP20**
Origin of manufacturer	**Made in Taiwan**
Warranty	**2 year standard warranty (See Website for terms and conditions)**
Lighting Product Type 1	**Accessory**

Electrical

Voltage Rating	**220-240**
Operating Frequency Hz	**50/60Hz**

SAMPLE

Luminaire Circuit Wattage	**50W Max**
Class	**I**
Dimmable	**no**

Performance Data

Energy Rating	**A+**

Construction

Primary Material	**Steel**

Packaging

Product Bar Code EAN-13 Number	**5052544005183**

Standards & Approvals

Manufactured In Accordance To	**BS EN 60598-2-1**
CE Marked	**yes**
UKCA Marked	**Yes**
Date code/Purchase order No.	**Yes**
Certificate Of Conformity	**Available on request**
Accredited Members	**LIA, ISO9001-2015, ISO14001-2015**

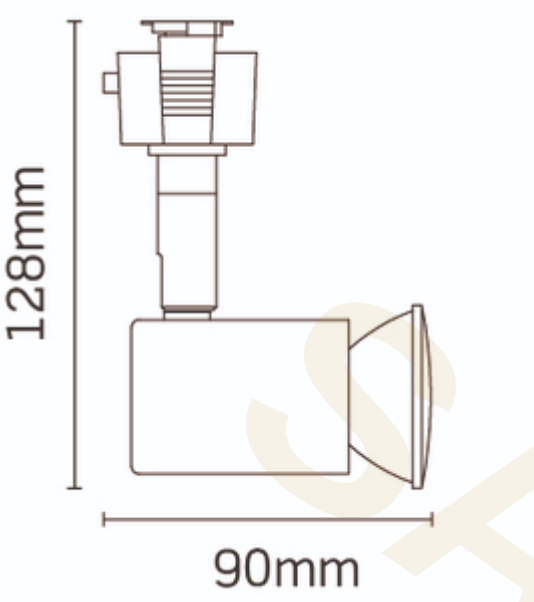

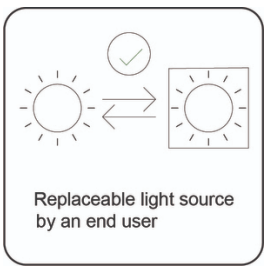

SAMPLE

JCC Lighting LTD Innovation Centre, Beeding Close, Southern Cross Trading Estate, Bognor Regis, West Sussex PO22 9TS
Sales: 01243 838999 (8am to 5pm Monday to Friday) Fax: 01243 838998 | sales@jcc.co.uk | www.jcc.co.uk
Company Registration Number: 03044848 | VAT Number: 918544112

SAMPLE

4. Manufacturer Product Data Sheets

4.16

JCC 5ft LED Batten Single

Source file: Datasheet_[JC71743]Skypack QR_(04-May-2022).pdf

SAMPLE

JC71743

Skypack QR

Skypack QR LED Batten 5ft Single IP20 4000K 37W 4400Lm



Features & Benefits

- Intelligent press release buttons for simple installation
- Ultra efficient up to 120 lumens per circuit Watt
- Suspended LED tray for easy installation
- Press fit terminals loop in loop out
- Rear and end conduit entry points
- Emergency and microwave dimmable and on/off options
- 2 years standard warranty extends to 5 years when registered within the first year of purchase (See Website for terms and conditions)
- This product contains a light source of energy efficiency class E



General Information

Mounting	**Surface Mounted**
Environment	**Indoor**
Product Group	**LED - Surface**
Product Range	**Skypack™**
Trade Name	**Skypack™ QR**
Color Finish	**White**
Product Shape	**Rectangular**
Product Weight(kg)	**1.716**
Overall Dimensions	**1523 x 70 x 76.5**
Light Source	**LED**
Light Source Features	**Neutral White**
Recommended Product Location	**Domestic, Commercial and Industrial Applications**
Method Of Fix	**Surface with Conduit Entry**
IP Rating	**IP20**
Origin of manufacturer	**Made In China**
Warranty	**2 years standard warranty extends to 5 years when registered within the first year of purchase (See Website for terms and conditions)**
Driver Manufacturer	**JCC**

SAMPLE

LED Manufacturer/Type	**XINDA**
Lighting Product Type 1	**Linear Lighting**

Electrical

Voltage Rating	**220-240**
Primary Running Current(Amp)	**0.16-2.1**
Operating Frequency Hz	**50/60Hz**
Secondary running current(mA)	**900**
Constant Current or Constant Voltage	**CC**
Luminaire Circuit Wattage	**37**
Class	**I**
EMC Compliant (EN55015)	**Yes**
Power Factor Correction	**0.9**
Input Electrical Connections	**Live, Earth & Neutral**
Dimmable	**No**

Performance Data

LED Life (Hours)	**54000**

Hours life stated is an indication of expected L70 chip and light output calculations when operating in optimum conditions. Product warranty period supports the full product during the term given. The L70 hours expectancy is not correlated with the full product warranty term, nor is it a representation of lumen depreciation during the warranty period.

Energy Rating	**This product contains a light source of energy efficiency class E**
Actual Lumen Output	**4440**
Lumens Per Circuit Watt	**120**
Color Rendering Index	**80-89**
CRI: Ra	**80**
Correlated Color Temperature	**4000K**
Beam Angle °	**120**
LOR (Light Output Ratio) %	**100**
Photometry Available	**Yes**

Construction

Primary Material	**Steel**
Outer Diffuser	**Polycarbonate**

Packaging

Product Packaged Weight(kg)	**2.013**
Quantity Per Outer Carton	**6**
Outer carton(L)- cm	**156.5**
Outer carton(W)- cm	**32**
Outer carton(H)- cm	**21.5**
Outer carton Net weight- kg	**10.3**
Outer carton Gross weight- kg	**13.13**
Product Bar Code EAN-13 Number	**5052544080463**

SAMPLE

Outer carton Bar Code ITF-14 Number	**15052544080460**

Standards & Approvals

Manufactured In Accordance To	**BS EN 60598:2015, 2-1**
CE Marked	**Yes**
UKCA Marked	**Yes**
Date code/Purchase order No.	**Yes**
WEEE Symbol	**Yes**
Certificate Of Conformity	**Available on request**
Accredited Members	**LIA, ISO9001-2015, ISO14001-2015**

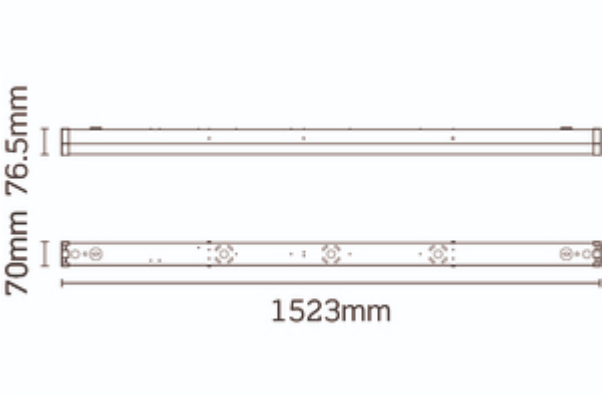

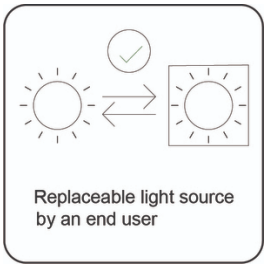



SAMPLE

4. Manufacturer Product Data Sheets

4.17

CP Electronics Flush Ceiling PIR Presence

Source file: GEFL-IP Datasheet Issue 1 A4.pdf

SAMPLE

GEFL-IP | Low profile, flush mounted, ceiling, PIR, occupancy sensor



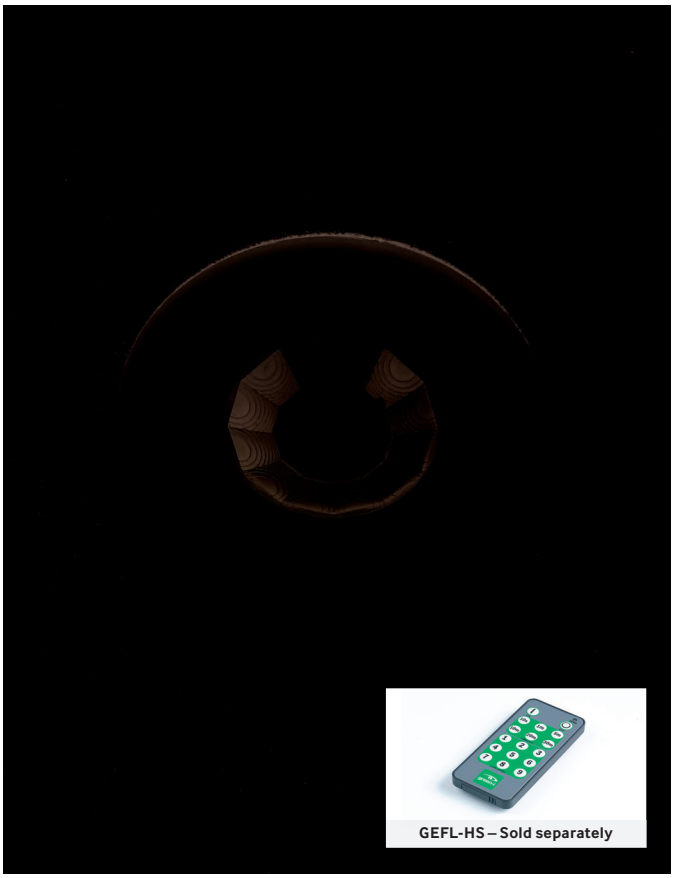

A low profile, flush mounted presence detector that is easy to set up via an infrared handset (GEFL-HS – sold separately), that provides auto on/auto off switching.

Key Product Features:

- Presence detection
- Lux level sensing
- Adjustable via IR handset
- Adjustable lux and timer
- Switches any type of load
- Works with any type of lamp
- IP55 rated.

Detection pattern

high < sensitivity > low

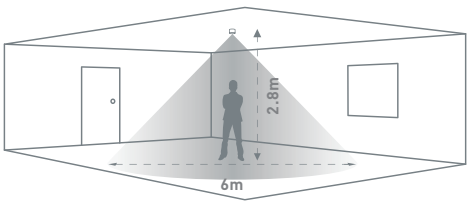

Dimensions (mm)

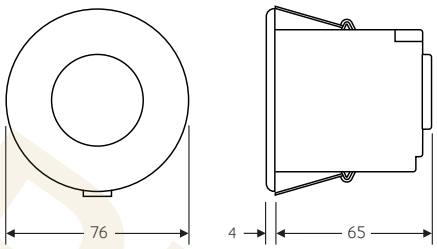

5 YEAR WARRANTY · UK DESIGN · SUITS LED

SAMPLE

Technical Data

Part Code	GEFL-IP
Weight	0.150kg
Supply voltage AC	230 VAC +/- 10%
Supply Frequency	50Hz
Terminal capacity	2.5mm²
Max switched L-out load:	
Incandescent lighting	8A
Fluorescent lighting	4A
Compact fluorescent lighting	3A
LED lighting	3A
Resistive heaters	8A
Purpose	Sensing control
Construction	Independent flush mounted, electronic control
Type of action	Type 1.B action (micro disconnection)
Pollution	Degree 2
Software	Class A
Time out range	10s–30m
Rated impulse voltage	2500V
Operational temperature	-10 to 35°C
Material (casing)	Flame retardant ABS
Insulation class	Class 2
IP rating	55
Compliance CE	EMC-2014/30/EU, LVD-2014/35/EU

SAMPLE

CP electronics ENERGY CONTROLS

+44 (0)333 900 0671
info@cpelectronics.co.uk
www.cpelectronics.co.uk

connect with us

CP Electronics, a business unit of Legrand Electric Limited, Brent Crescent, London NW10 7XR, UK

A brand of legrand®

19877

4. Manufacturer Product Data Sheets

4.18

Hager 125A 12-Way TPN Distribution Board

Source file: JK112BG.pdf

SAMPLE



JK112BG

125A 12 Way TPN Board Glazed Door

Technical characteristics

Architecture	
Fixing mode	surface-mounting
Main electrical features	
Rated current	125 A
Dimensions	
Depth of installed product	132,5 mm
Height of installed product	850 mm
Width of installed product	465 mm
Cover, door	
Type of door closing	Quarter turn lock
Door locking	with key
Materials	
Colour	RAL 7035
Colour	beige
RAL colour	RAL 1001 - Beige
RAL colour number	7035
Material	Steel
Standards	
European directive WEEE	concerned
Safety	
Protection index IP	IP3X
Protection class	Protection class III

SAMPLE

4. Manufacturer Product Data Sheets

4.19

Hager 10-Way Lighting Distribution Unit

Source file: KLDS10.pdf

SAMPLE



KLDS10

IP20

10 Way klik Lighting Distribution Unit

Technical characteristics

Main electrical features	
Rated operational voltage Ue	207 / 230 / 253 V
Rated current	16 A
Electric current	
Current Rating - Outgoing	6 A
Materials	
Material	Plastic/metal
Identification	
Application, usage	Light control

SAMPLE

4. Manufacturer Product Data Sheets

4.20

Collingwood 150W Linear Low Bay Light

Source file: LB15040 120 (H&HE).pdf

SAMPLE

LOW BAY SPECIFICATION SHEET







Lentus

Linear Low Bay lighting, dimmable as standard 3-in-1

FEATURES

IK rating	IK08
IP rating	IP40
Colour flexibility	Fixed colour
Dimmable	Yes
Input	220-240V 50/60Hz Surge protection 6KV/10KV
LED Lifetime	50,000h L80 B10
CRI	>80Ra
SDCM	5SDCM
Flicker Free	Yes
Emergency version available	Yes
Wattage	100W 150W

INSTALLATION INFORMATION

Install Connector Type	Std - Flying Lead EM - Push-fit Term
Inrush Current	100W - 70A 0.2ms 150W - 110A 0.2ms
Construction Material	Aluminium
Weight	100W - 2.57Kg 150W - 2.70Kg
Maximum ambient temperature	Std -40°C to +50°C Em 0°C to +40°C
SELV	Yes
Building regulations	Part P
Electric Class (1, 2, 3)	1

PHOTOMETRICS @ 25°C

Product code	Finish	Feature I	Feature II	Wattage	Colour	Beam angle	lm	lm/W	EM lm
LB10040	White	100W	Non emergency option	100W	4000K	120°	15000	150	-
LB10040E	White	100W	Emergency option	100W	4000K	120°	15000	150	340lm
LB15040	White	150W	Non emergency option	150W	4000K	120°	22000	147	-
LB15040E	White	150W	Emergency option	150W	4000K	120°	22000	147	340lm

WIRING INFORMATION

Cable / Flying Lead	Standard: 400mm H05RN-F 3x1.0mm² Ø7mm Emergency: Push-fit terminals 4x 0.75-2.5mm²
Type of Wiring Required	Parallel

ACCESSORIES

LBAL90	Replacement Lens 90° beam angle	Sold Separately
LBAL5090	Replacement Lens 50°x90° beam angle	Sold Separately
LBAHK	Suspension Kit	Included
LBAS	Microwave sensor	Sold Separately
LBASDHS	Microwave & Daylight Harvesting Sensor	Sold Separately
HBASDHSRC	Microwave & Daylight Harvesting Sensor Controller	Sold Separately

SAMPLE

COLLINGWOOD
LIGHTING

01604 495 151
collingwoodlighting.com

/collingwoodlighting
/collingwoodlighting
collingwoodled

GUARANTEE / WARRANTY

5 year extended guarantee
2 year guarantee on emergency unit
2 year on-site guarantee

FEATURES & BENEFITS

A range of mounting options available allowing excellent flexibility on installation

Specifically designed for use in aisle spaces

A range of accessories available

Highly efficient, up to 150lm/W

1-10V, PWM and resistor dimmable as standard, 3-in-1

Emergency lumens output: 340lm

Surge Protection
L/N-PE = 10KV
L-N = 6KV

Light source energy efficiency:



Beam angle: 120°

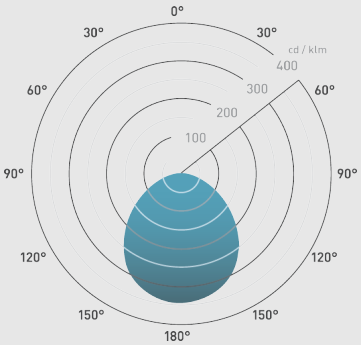



4. Manufacturer Product Data Sheets

4.21

Mitsubishi Electric Lossnay Heat Recovery Ventilation

Source file: LGH-RVX-Brochure.pdf

SAMPLE

The Renewable Solutions Provider

Making a World of Difference

Lossnay RVX Series

Lossnay





SAMPLE

MITSUBISHI ELECTRIC

Air Conditioning | Heating
Ventilation | Controls

Why do we need fresh air ventilation?

Poor indoor air quality can be attributed to many problems inside a building. Excess humidity causes dampness, rot and mould, whilst pollutants are known to be a major cause of damaging health issues such as asthma and eczema. Stale air is also believed to lead to a loss in productivity and low morale.

As the demand for improved energy efficiency results in increasingly airtight buildings, natural ventilation proves less effective and drives the need for mechanical ventilation. With increasing legislation, the challenge for designers, installers and occupiers of any building is to find ventilation that's both effective and energy efficient.

Mitsubishi Electric meets this need with a range of Lossnay Mechanical Ventilation Heat Recovery (MVHR) systems, designed to supply fresh air into any commercial building whilst simultaneously extracting stale air and, most importantly, recovering valuable heat energy for maximum efficiency.

The benefits of Lossnay include:

- Clean, fresh air
- Improved air quality and comfort
- Increased climate control
- Reduced energy bills
- Energy efficient heat recovery
- Significantly reduced power consumption and SFP's

SAMPLE

Lossnay is a state-of-the-art heat exchange technology, that enables CO_2 reduction and energy saving



Legislation - driving the need for effective ventilation

ErP Directive

The Ecodesign Directive for Energy Related Products (ErP) is European legislation adopted in 2009 to improve the environmental performance of any products that use energy or that are related to energy consumption.

All fans, including those integrated into other products, with an electrical power input between 125W and 500kW are subject to this legislation which has been implemented over two stages. The implementation of the first stage took place on the 1st January 2013 and set out the first tier of minimum energy efficiency requirements.

The second stage has been effective since the 1st January 2015 and called for a higher level of minimum energy efficiency requirements for fans.

Part L

Part L of the Building Regulations calls for buildings to be more airtight and energy efficient.

As a result, maintaining good indoor air quality through effective ventilation is vital and MVHR systems are perfect to achieve this in an energy efficient manner. Part L covers the maximum amount of electricity a mechanical ventilation system should use and more specifically what the fan motors in a unit should use (Specific Fan Power (SFP)).

Furthermore, figures for minimum energy efficiency for heat exchangers in heat recovery systems are outlined for non-domestic buildings. Currently Part L calls for heat recovery systems with plate heat exchangers, installed in non-domestic buildings, to be at least 50% efficient.

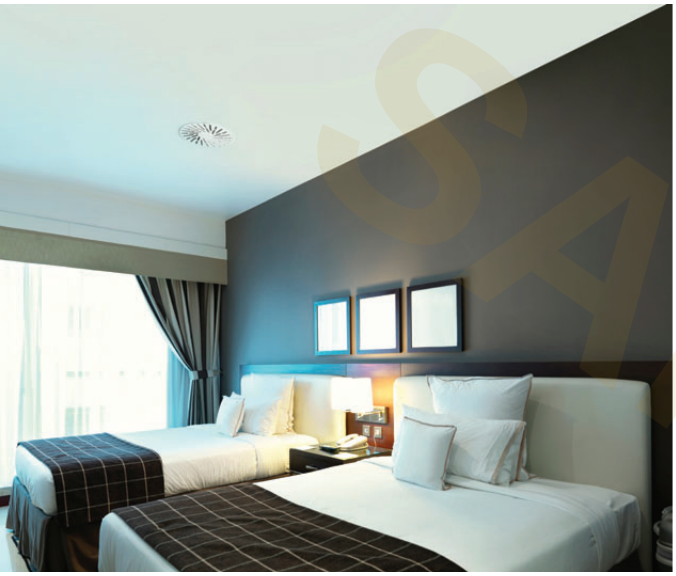

Part F

Part F of the Building Regulations focuses on ventilation systems and indoor air quality in both domestic and commercial buildings.

It covers all aspects of specifying and designing a ventilation system and gives guidance on installation, commissioning, operation and maintenance. Minimum ventilation rates are also advised within the document, e.g. a minimum air supply rate of 10l/s/person (litres per second, per person) is advised in offices.

Mechanical ventilation with heat recovery can help reduce overheating in buildings and decrease both heating and cooling loads

How Lossnay works

The technology behind the energy efficiency of Lossnay lies in the construction of the core which enables exchange of both latent heat (humidity/moisture) and sensible heat (temperature) to maintain a comfortable internal environment for minimal energy consumption.

The core is made from ultra-thin paper and sits at the heart of the system. Constructed in a corrugated form and layered in alternate directions, the core allows a cross airflow to maximise heat recovery without the supply and exhaust air mixing, ensuring only fresh air is introduced into a building.

The use of ultra-thin paper enables the unit to achieve high enthalpy exchange efficiency and dramatically increases moisture permeability whilst acting as a barrier against air leakage.

Lossnay's Dynamic Paper Heat Exchanger Core

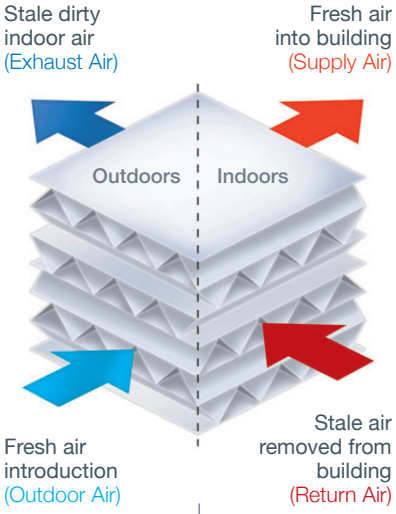

As Lossnay extracts stale air from a building, heat energy is recovered through the paper core and transferred into the fresh incoming air

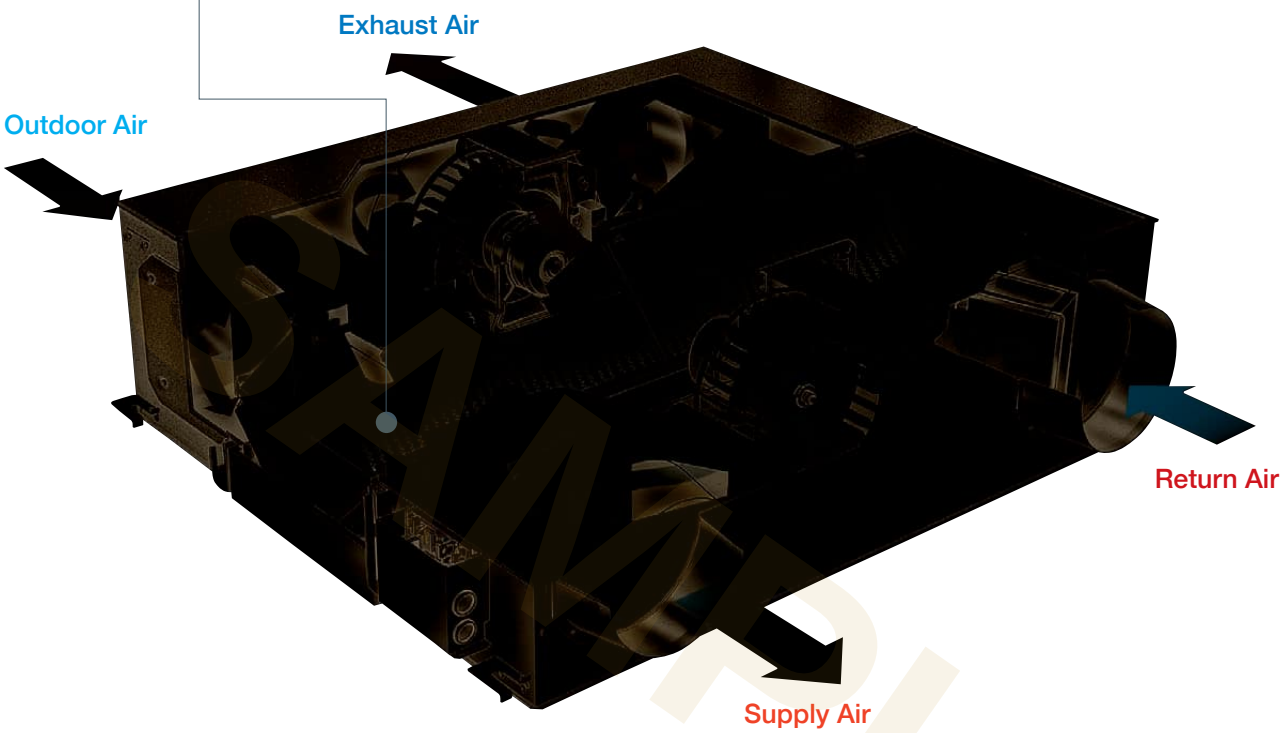

SAMPLE

New More Efficient DC Fan Motor

Benefits of this include:

1. **Reduced power consumption**
2. **Reduced SFP's**
3. **More energy saving**
4. **Wider range of air volume**

Low Power Consumption

The adoption of more efficient DC fan motors means that the new Lossnay RVX units are able to offer a significant reduction in power consumption.

Low Specific Fan Powers (SFP's)

This reduction enables the Lossnay RVX units to benefit from significantly lower specific fan powers (SFP's). With SFP's ranging from as low as 0.30 W/(l/s) up to a maximum of 1.61 W/(l/s) across the entire range, the Lossnay RVX units more than comply with Building Regulations and legislation and allow for more energy saving and reduced carbon emissions.

Improved Air Volume

The new units also benefit from a wider air volume range with four distinct and selectable fan speeds compared to the three fan speeds with the previous model. Each fan speed is 25%, 50%, 75% and 100% of the rated air volume of each unit allowing more precise air volume control.



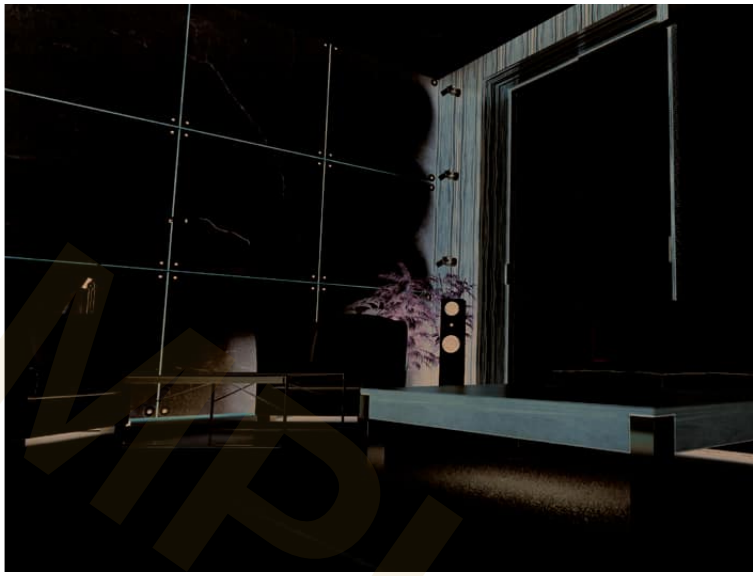

SAMPLE

COMPARISON BETWEEN NEW AND PREVIOUS POWER CONSUMPTION (New Model: Fanspeed 4, Previous Model: Extra High)

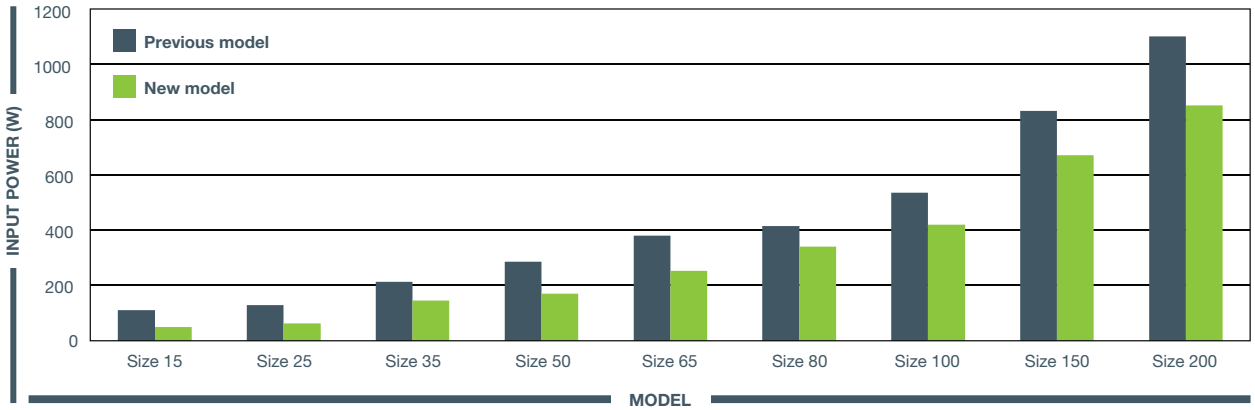

PREVIOUS MODEL CHARACTERISTIC CURVES

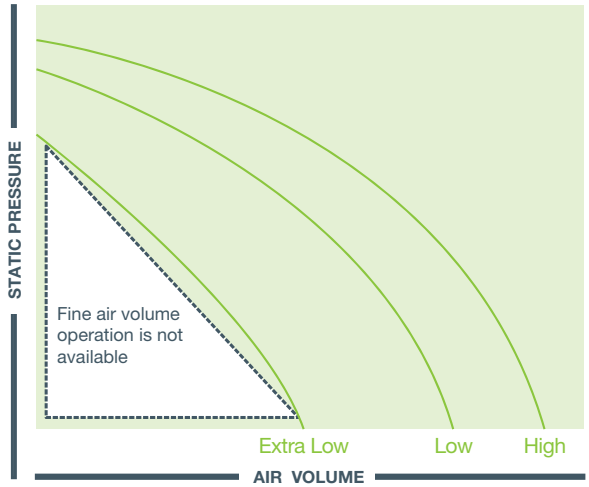

NEW MODEL CHARACTERISTIC CURVES

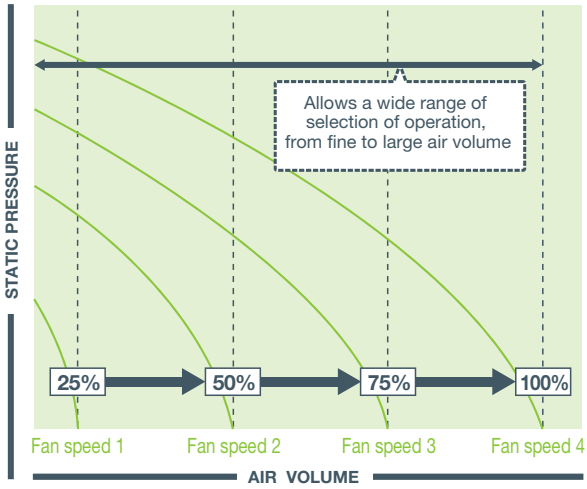



PZ-61DR-E Controller

New Remote Controller



The design of the new PZ-61DR-E Lossnay controller has been unified with the PAR-31MAA air conditioning controller with a full-dot backlit LCD screen making it easy to see and use. Additionally the new controller has a vast range of added functionality allowing for flexibility on application and increased energy saving.

An example of this is the weekly timer function (shown below) which now allows all four fan speeds to be selected enabling optimised ventilation not just at different times of the day but also for different days of the week.

During summer nights the night purge function of the Lossnay units allows cooler fresh air to be brought into the building via the bypass damper, to reduce internal temperatures and cool the building fabric therefore reducing the load on the air conditioning system the next morning. This function on the new RVX units has been made more flexible whereby, it is now possible to select the operation start conditions, air volume and operation time to suit each application.

Auto ventilation mode, a function which automatically switches the Lossnay units between heat recovery mode and bypass mode dependent on indoor and outdoor conditions, has been made more flexible with the new RVX units. There are now two pre-defined factory settings that can be used for this function or a completely free setting allowing the conditions of bypass mode to be individually selected for each application.

Example:
Weekly Timer Function

Previous Model



New Model

Total Power Consumption in a week

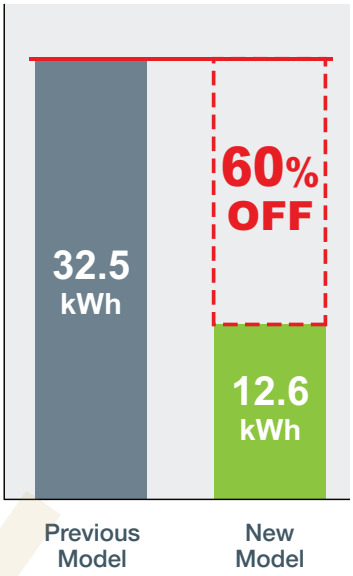

SAMPLE

PCB Functionality

The PCB of the new Lossnay RVX units has some added functionality allowing for more flexible control options. The connection of a third party pre / post-heater with operation functionality is now available. Additionally external fan speed control using 0-10V DC signal is possible across all four fan speeds allowing fan speed control using a third party CO_2 sensor or a BEMS system.

Fan Speed 4

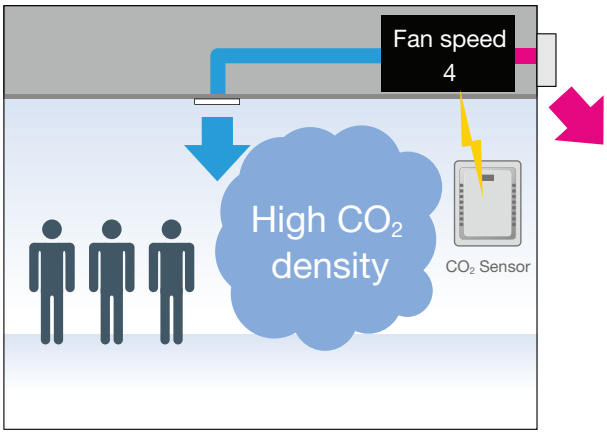

Fan Speed 1

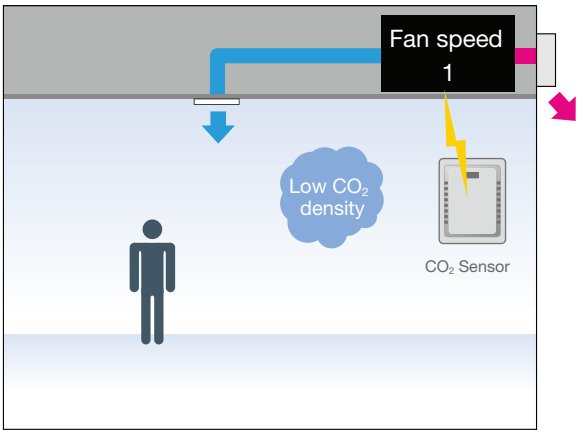

Centralised Control

As well as being able to interlock with Mitsubishi Electric Mr Slim and City Multi air conditioning systems, the new Lossnay RVX units can be centrally controlled using an AE-200E centralised controller with optional energy monitoring functionality.

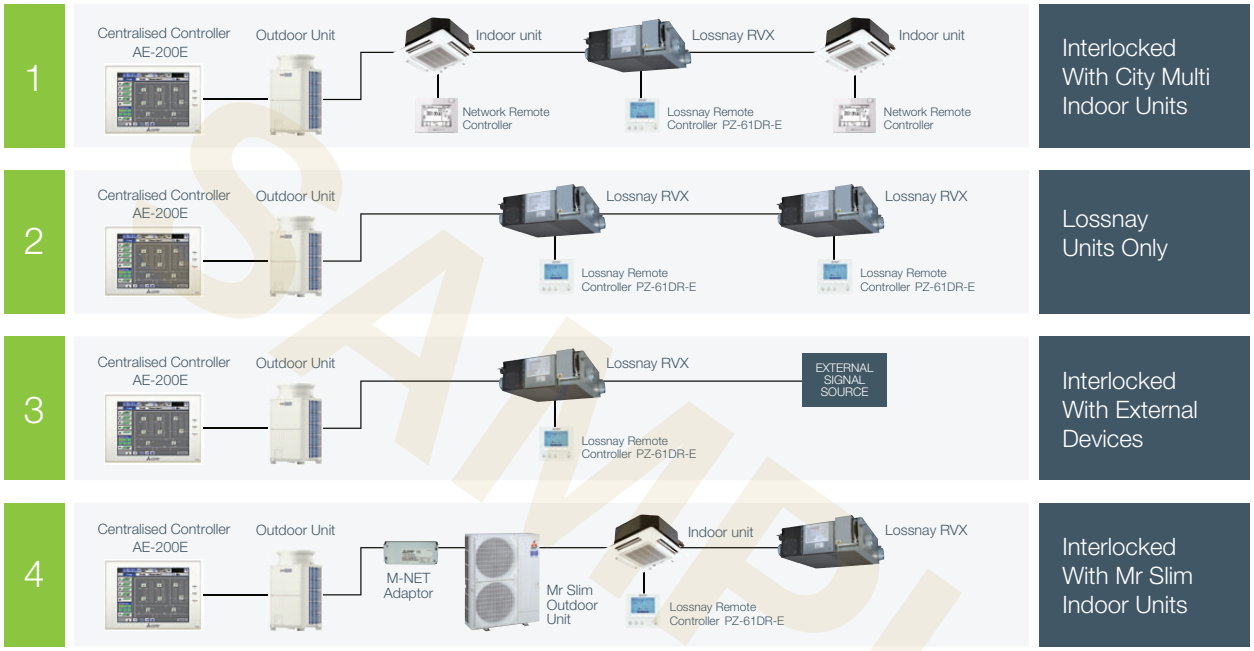

SAMPLE

LGH-RVX-E Commercial Series

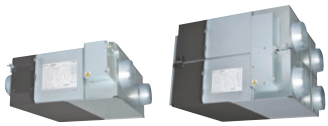

COMMERCIAL MODELS			LGH15RVX-E	LGH25RVX-E	LGH35RVX-E	LGH50RVX-E	LGH65RVX-E	LGH80RVX-E	LGH100RVX-E	LGH150RVX-E	LGH200RVX-E
ELECTRICAL POWER SUPPLY			220-240V, 50Hz	220-240V, 50Hz	220-240V, 50Hz	220-240V, 50Hz	220-240V, 50Hz	220-240V, 50Hz	220-240V, 50Hz	220-240V, 50Hz	220-240V, 50Hz
RUNNING CURRENT (A)		SP1	0.10	0.10	0.12	0.13	0.15	0.15	0.17	0.29	0.33
		SP2	0.15	0.16	0.26	0.26	0.39	0.36	0.50	0.70	0.88
		SP3	0.24	0.28	0.54	0.59	0.90	0.83	1.20	1.75	2.20
		SP4	0.40	0.48	0.98	1.15	1.65	1.82	2.50	3.71	4.88
INPUT POWER (W)		SP1	7	8	11	12	15	18	21	38	42
		SP2	14	16	31	32	49	60	75	123	153
		SP3	28	33	70	78	131	151	200	311	400
		SP4	49	62	140	165	252	335	420	670	850
AIRFLOW (m^3/h)*2		SP1	38	63	88	125	163	200	250	375	500
		SP2	75	125	175	250	325	400	500	750	1000
		SP3	113	188	263	375	488	600	750	1125	1500
		SP4	150	250	350	500	650	800	1000	1500	2000
AIRFLOW (l/s)*2		SP1	10	17	24	35	45	56	69	104	139
		SP2	21	35	49	69	90	111	139	208	278
		SP3	31	52	73	104	135	167	208	313	417
		SP4	42	69	97	139	181	222	278	417	556
SPECIFIC FAN POWER (W/(l/s))		SP1	0.70	0.47	0.46	0.34	0.33	0.32	0.30	0.37	0.30
		SP2	0.67	0.46	0.63	0.46	0.54	0.54	0.54	0.59	0.55
		SP3	0.90	0.63	0.96	0.75	0.97	0.90	0.96	0.99	0.96
		SP4	1.17	0.90	1.44	1.19	1.39	1.51	1.51	1.61	1.53
EXTERNAL STATIC PRESSURE (Pa)		SP1	6	5	10	8	8	10	11	11	10
		SP2	24	21	40	30	30	38	43	44	38
		SP3	54	48	90	68	68	85	96	98	84
		SP4	95	85	160	120	120	150	170	175	150
SOUND PRESSURE LEVEL (dBA)		SP1	17	17	17	18	18	18	18	18	18
		SP2	19	20	20	19	22	23	23	24	28
		SP3	24	22	28	28	29	30	31	32	36
		SP4	28	27	32	34	34.5	34.5	37	39	40
TEMPERATURE EXCHANGE EFFICIENCY (%)		SP1	84	86	88.5	87	86	85	89.5	85	89.5
		SP2	83	82	86	83.5	84	84	86.5	84	86.5
		SP3	81	80	82.5	81	81	82.5	83	82.5	83
		SP4	80	79	80	78	77	79	80	80	80
ENTHALPY EXCHANGE EFFICIENCY (%)	Heating	SP1	79	83	83.5	82.5	82	81	87	81	87
		SP2	78	76	78.5	75	76	78	78	78	78
		SP3	75.5	72	74	71	71	73.5	74	73.5	74
		SP4	73	69.5	71.5	69	68.5	71	72.5	72	72.5
	Cooling	SP1	79	83	82	82	81	81	85.5	81	85.5
		SP2	78	74.5	78	72.5	74	78	77	78	77
		SP3	74.5	70	73	68	69.5	72.5	73	72.5	73
		SP4	71	68	71	66.5	66	70	71	70.5	71
WEIGHT (kg)			20	23	30	33	38	48	54	98	110
DIMENSIONS (mm) Width x Depth x Height			780 x 610 x 289	780 x 735 x 289	888 x 874 x 331	888 x 1016 x 331	908 x 954 x 404	1144 x 1004 x 404	1144 x 1231 x 404	1144 x 1004 x 808	1144 x 1231 x 808
DUCT SIZE (mm)			100	150	150	200	200	250	250	(SA,RA) 250 (OA,EA) 270 x 700	(SA,RA) 250 (OA,EA) 270 x 700
STANDARD FILTER*1			EU-G3	EU-G3	EU-G3	EU-G3	EU-G3	EU-G3	EU-G3	EU-G3	EU-G3
FUSE RATING (BS88) – HRC (A)			6	6	6	6	6	6	6	10	10

Notes: Running Current, Input Power and Recovery Efficiency are based on the above airflow rate, power supply 240v, 50Hz. Sound Pressure Level measured at 1.5m under the centre of panel.
*1: EU-F7 filter available as optional parts. *2: Airflow tested to Japan industrial standard JIS B 8628. SP1, SP2, SP3 & SP4 relate to the fan speeds of the Lossnay RVX units i.e. fanspeed 1, 2, 3 & 4.

Lossnay Housings are also available, please contact Mitsubishi Electric for further information.

SAMPLE

Product Information

DIMENSIONS LGH-15RVX-E

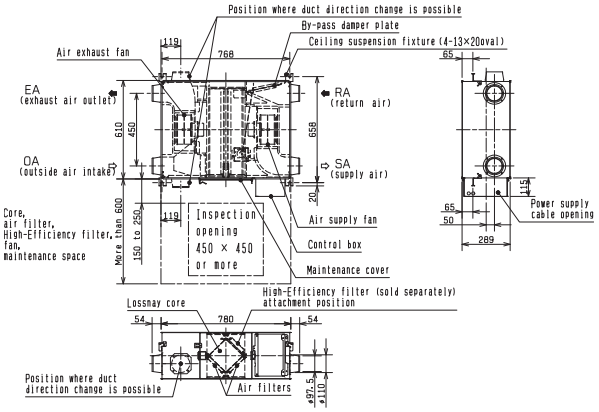

DIMENSIONS LGH-25-100RVX-E*

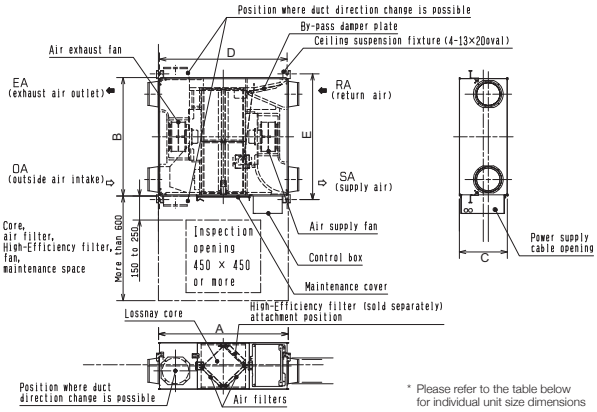

* Please refer to the table below for individual unit size dimensions

MODEL REFERENCE	DIMENSIONS			CEILING SUSPENSION FIXTURE PITCH		NOMINAL DUCT DIAMETER
	A	B	C	D	E	
LGH-25RVX-E	780	735	289	768	782	150
LGH-35RVX-E	888	874	331	875	921	150
LGH-50RVX-E	888	1016	331	875	1063	200
LGH-65RVX-E	908	954	404	895	1001	200
LGH-80RVX-E	1144	1004	404	1131	1051	250
LGH-100RVX-E	1144	1231	404	1131	1278	250

DIMENSIONS LGH-150RVX-E

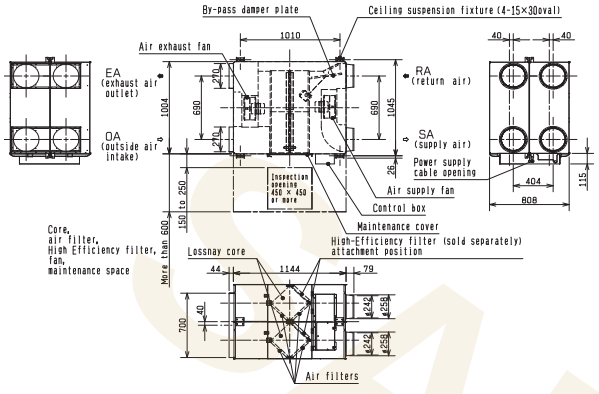

DIMENSIONS LGH-200RVX-E

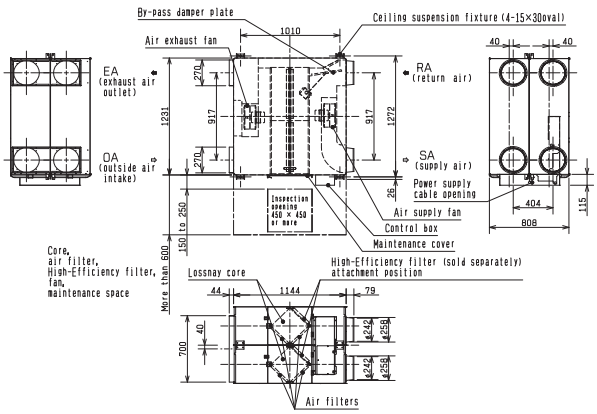

SAMPLE

MITSUBISHI ELECTRIC
Changes for the Better

Telephone: 01707 282880

email: ventilation@meuk.mee.com
web: airconditioning.mitsubishielectric.co.uk

UNITED KINGDOM Mitsubishi Electric Europe Living Environmental Systems Division
Travellers Lane, Hatfield, Hertfordshire, AL10 8XB, England
General Enquiries Telephone: 01707 282880 Fax: 01707 278881

IRELAND Mitsubishi Electric Europe Westgate Business Park, Ballymount, Dublin 24, Ireland
Telephone: Dublin (01) 419 8800 Fax: Dublin (01) 419 8890 International code: (003531)

Country of origin: United Kingdom – Japan – Thailand – Malaysia. ©Mitsubishi Electric Europe 2015. Mitsubishi and Mitsubishi Electric are trademarks of Mitsubishi Electric Europe B.V. The company reserves the right to make any variation in technical specification to the equipment described, or to withdraw or replace products without prior notification or public announcement. Mitsubishi Electric is constantly developing and improving its products. All descriptions, illustrations, drawings and specifications in this publication present only general particulars and shall not form part of any contract. All goods are supplied subject to the Company's General Conditions of Sale, a copy of which is available on request. Third-party product and brand names may be trademarks or registered trademarks of their respective owners.

Effective as of January 2015 SAP No. 283848

FSC www.fsc.org MIX Paper from responsible sources FSC® C023471

Green Gateway
www.greengateway.mitsubishielectric.co.uk
Mitsubishi Electric UK's commitment to the environment

Follow us @meuk_les
Follow us @green_gateway
Mitsubishi Electric Living Environmental Systems UK
mitsubishielectric2

NEW RE

4. Manufacturer Product Data Sheets

4.22

British General 13A Single Switched Socket

Source file: MC521_MC522_MC523_MC524_13amp_socket_outlets.pdf

SAMPLE

Technical Data

13 Amp Socket Outlets

Brief product description:

A rugged, scratch resistant range, suitable for everyday use in commercial and industrial environments.

Manufactured in heavy gauge steel and finished with epoxy powder coating.

Features:

- Flat profile with rounded edges
- Colour coded terminals with backed out captive screws for easy installation
- 2 Earth terminals

Product Images



MC521



MC522



MC523



MC524

Technical Specifications

Standard(s)	BS 1363 Part 2
Rating	13 Amp 250V~
Contact Gap	3.0mm minimum
Switch type	Double pole (MC521, MC522)
RoHS Directive	No
WEEE Directive	No
Terminal Capacity	3 x 2.5mm² 3 x 4mm² 2 x 6.0mm² (MC523, MC524)
Size	81.5mm x 81.5mm x 51mm (MC521)
	142mm x 81.5mm x 51mm (MC522)
	81.5mm x 81.5mm x 46mm (MC523)
	142mm x 81.5mm x 46mm (MC524)

Packaging Information

Cat No.	Description	Packaging Type			Pack Quantity			Barcode		
		Product	Inner Box	Outer Box	Each	Inner Box	Outer Box	Individual	Inner Box	Outer Box
MC521	13A 1G, SW SKT	Plain PolyBag	Plain Inner	Plain Outer	1	10	50	/	5021166052196	5021166052189
MC522	13A 2G, SW SKT	Plain PolyBag	Plain Inner	Plain Outer	1	5	25	/	5021166052295	5021166052288
MC523	13A 1G, SKT	Plain PolyBag	Plain Inner	Plain Outer	1	10	50	/	5021166052394	5021166052387
MC524	13A 2G, SKT	Plain PolyBag	Plain Inner	Plain Outer	1	5	25	/	5021166052493	5021166052486

SAMPLE

13 Amp Socket Outlets

Weights & Dimensions

Cat No.	Description	Dimension (W x L x H) cm			Weight (g)			CMB (m^3)
		Product	Inner Box	Outer Box	Each	Inner Box	Outer Box	Outer Box
MC521	13A 1G, SW SKT		16.6 x 25.8 x 8.3	17.6 x 45 x 27			14330	0.021384
MC522	13A 2G, SW SKT		14.5 x 25.8 x 8.3	15.5 x 45 x 27			11630	0.0188325
MC523	13A 1G, SKT		16.8 x 23.3 x 8.8	17.8 x 46.5 x 24.8			13370	0.02052696
MC524	13A 2G, SKT		14.5 x 25.8 x 8.3	15.5 x 45 x 27			11340	0.0188325

Installation Information

Safety Warning

Before use please read carefully and use in accordance with these safety wiring instructions.

Before commencing any electrical work ensure the supply **is switched off at the mains**. Either by switching off the consumer unit or by removing the appropriate fuse.

Wiring should be in accordance with the latest edition of the IEE regulations (BS 7671).

Wire Identification – Twin & Earth Cable

EARTH = Green/Yellow Sleeving

NEUTRAL = Black (pre Apr 04) / Blue (after Apr 04)

LIVE = Red (pre Apr 04) / Brown (after Apr 04)



Technical Helpline: 0845 194 7584
If in doubt consult a competent electrician.

The ends of the individual conductors should have the insulation removed by approx.12mm. Any bare earth conductors should be sleeved to within 12mm of the ends.
(These details are for general information only and conductor lengths may need to be trimmed in certain installations).

General Installation Instructions

1) If using the new product to replace an old one, note the cable connections and wire up new product in the same way as the old one, with Earthing as stated in these instructions.
2) Ensure the mounting box (metal or patress) for either flush or surface mounting is the appropriate size for the product.
3) Route the cable through the most suitable entry point of the mounting box. If a metal box is used, a protective cable grommet should be used.
4) Cables should be prepared so a sufficient conductor length reaches the terminals. Strip the ends of the individual conductors so that an adequate length enters the terminals.
5) Carefully arrange the wiring to lie along the edges of the product or box, keeping the central area clear.
6) To assist with the correct installation please consult the appropriate wiring diagram on this leaflet.
7) When connecting the new accessory ensure that only the bare end of the wire enters the terminal, and no bare wires are visible.

Always tighten the terminal screws securely, but do not overtighten.

An earth connection should always be made between the mounting box earth terminal, and the accessory earth terminal, where fitted. If this earth wire is bare, it is essential that it is sheathed with a length of green/yellow sleeving.

8) Carefully position the accessory into the wall box, ensuring that no wires are trapped between the plate and the wall. Do not overtighten the screws. (Fit screw covers + clip-on)
9) Once work has been completed correctly, replace the fuse for the circuit, switch the power back on, and test.

The product is now ready for use.

* Note - If your installation uses a four lug metal mounting box, remove the top and bottom lugs or bend fully back.

1 Gang 13 Amp Switched Socket

This socket is fitted with with two linked terminals to provide a dual earth facility. This is for use in "clean earth" installations where additional earth capacity is required to comply with Regulation 607 of BS7671 IEE Wiring Regulations.

Connect the cables as shown in the diagram.

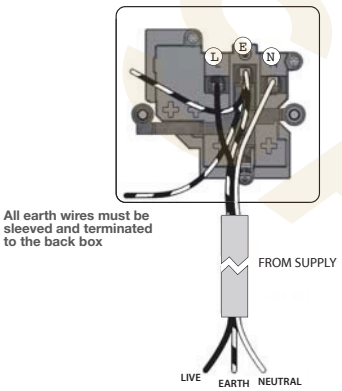

1 Gang 13 Amp Unswitched Socket

Connect the cables as shown in the diagram.

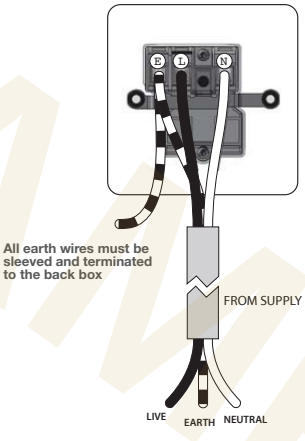

2 Gang 13 Amp Switched Socket

This socket is fitted with with two linked terminals to provide a dual earth facility.

This is for use in "clean earth" installations where additional earth capacity is required to comply with Regulation 607 of BS7671 IEE Wiring Regulations.

Connect the cables as shown in the diagram.

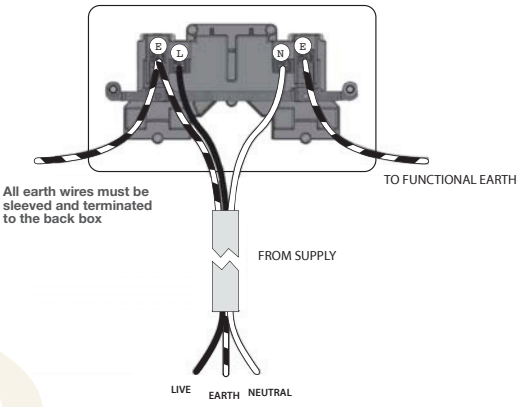

SAMPLE

Installation Information

2 Gang 13 Amp Unswitched Socket

This socket is fitted with with two linked terminals to provide a dual earth facility.
This is for use in "clean earth" installations where additional earth capacity is required to comply with Regulation 607 of BS7671 IEE Wiring Regulations.
Connect the cables as shown in the diagram.

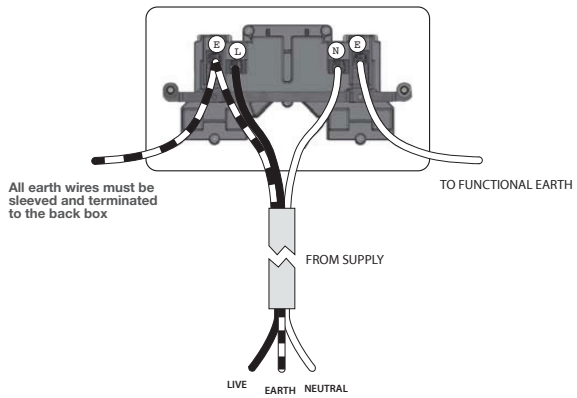

SAMPLE

4. Manufacturer Product Data Sheets

4.23

British General 13A FCU with Optional

Source file: metal-clad Data.pdf

SAMPLE



metal clad
wiring accessories

A rugged scratch resistant metal, suitable for everyday use in commercial and industrial environments

SAMPLE

Metal Clad Heavy Duty Wiring Accessories

Cat No.	Description	Inner Carton	Outer Carton
13 Amp Fused Connection Units			
MC550F	with optional flex outlet	10	50
MC551F	with power indicator and optional flex outlet	10	50
MC552F	with optional flex outlet	10	50

- Manufactured to BS 1363 part 4
- Mounting box with 1 x 20mm knockouts in each side and rear face
- Terminal capacity 3 x 2.5mm², 2 x 4.0mm² & 1 x 6.0mm²
- Removable flex outlet bung


MC550F


MC551F


MC552F

Blank and Euro Module Plates			
MC504	1 gang blank plate	10	50
MC505	2 gang blank plate	5	25
MC5EMS1	Euro Module 1 module - square	20	200
MC5EMS2	Euro Module 2 module - square	10	100
MC5EMR4	Euro Module 4 module - rectangular	10	100

- Not supplied with surface mounting box
- Manufactured to BS 5733


MC504


MC505


MC5EMS2


MC5EMR4

Cat No.	Description	Terminal Type	Inner Carton	Outer Carton
Telephone and Data Outlets				
MC5BTM1	Telephone master, 1 gang	Screw	EM	-
MC5BTM2	Telephone master, 2 gang	Screw	EM	-
MC5BTS1	Telephone slave, 1 gang	Screw	EM	-
MC5BTS2	Telephone slave, 2 gang	Screw	EM	-
MC5RJ111	RJ11 socket, 1 gang	Screw	EM	-
MC5RJ112	RJ11 socket, 2 gang	Screw	EM	-
MC5RJ451	RJ45 data outlet socket, 1 gang	IDC	EM	-
MC5RJ452	RJ45 data outlet socket, 2 gang	IDC	EM	-

- Telephone and data products are supplied in Euro Module format as a kit of components - separate front plate, module and mounting box
- Mounting box with 1 x 20mm knockouts in each side and rear face


MC5BTM1


MC5BTM2


MC5RJ11


MC5RJ12


MC5RJ451

4. Manufacturer Product Data Sheets

4.24

Mitsubishi Electric High SHF Cooling Only

Source file: MSY-TP35-50VF_High_SHF_Wall_Mounted_System_Product_Information_Sheet.pdf

SAMPLE

Air Conditioning

Product Information

MSY-TP R32
High SHF Wall Mounted System
Inverter Heat Pump (Cooling Only)

Making a World of Difference

M series

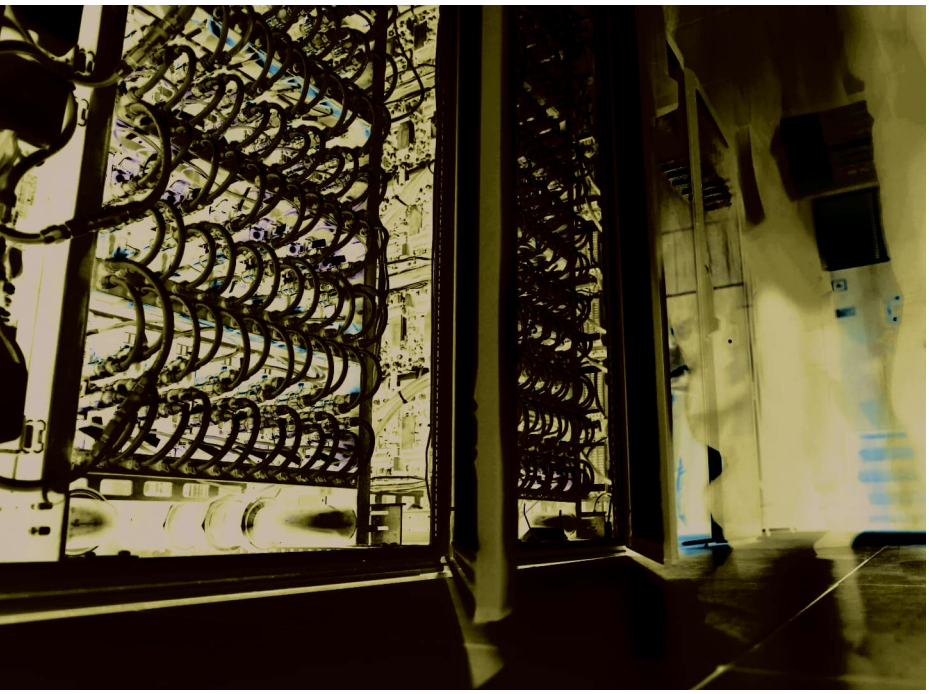



The M Series **MSY-TP R32** High SHF wall mounted system blends energy efficiency with a modern white design. This cooling only unit has a high sensible cooling capacity, making it ideal for small computer rooms or areas that require a greater degree of sensible cooling. The MSY-TP also utilises low GWP R32 refrigerant.

Key Features

- Compact and stylish white design
- High sensible cooling ability
- Highly energy efficient, utilising low GWP R32 refrigerant
- Built in connection to our optional Wi-Fi interface, enabling control and monitoring using a smart phone, tablet or PC via the MELCloud app
- Weekly timer provides greater control of scheduling
- Cooling down to -25°C outdoor air temperature

SAMPLE

MITSUBISHI ELECTRIC

Cooling | Heating | Ventilation | Controls

R32

Air Conditioning

Product Information

MSY-TP R32
High SHF Wall Mounted System
Inverter Heat Pump (Cooling Only)

Making a World of Difference





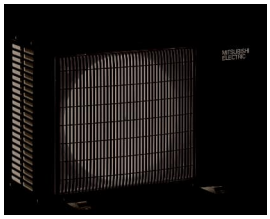

MSY-TP - INDOOR UNITS		MSY-TP35VF	MSY-TP50VF
CAPACITY (kW)	Heating (nominal)	3.5 (1.5-4.0)	5.0 (1.5-5.7)
	Cooling (UK)	3.47 (1.48-3.96)	4.96 (1.48-5.65)
SHF (nominal)		0.98	0.82
EER (nominal)		4.61	3.45
SEER (BS EN14825)		9.00	8.00
ErP ENERGY EFFICIENCY CLASS	Cooling	A+++	A++
AIRFLOW (l/s)	Cooling - Lo-Mi-Hi-SHi	168-193-228-273	168-193-228-273
PIPE SIZE mm (in)	Gas	9.52 (3/8")	9.52 (3/8")
	Liquid	6.35 (1/4")	6.35 (1/4")
SOUND PRESSURE LEVEL (dBA)	Cooling - Lo-Mi-Hi-SHi	31-36-40-45	31-36-40-45
SOUND POWER LEVEL (dBA)		60	60
DIMENSIONS (mm)	Width x Depth x Height	923 x 250 x 305	923 x 250 x 305
WEIGHT (kg)		12.5	12.5
ELECTRICAL SUPPLY		220-240v, 50Hz	220-240v, 50Hz
FUSE RATING (BS88) – HRC (A)		10	10
INTERCONNECTING CABLE No. CORES		4	4

MUY-TP - OUTDOOR UNITS		MUY-TP35VF	MUY-TP50VF
SOUND PRESSURE LEVEL (dBA)	Cooling	45	47
SOUND POWER LEVEL (dBA)	Cooling	58	61
WEIGHT (kg)		34	34
DIMENSIONS (mm)	Width x Depth x Height	800 x 285 x 550	800 x 285 x 550
ELECTRICAL SUPPLY		Fed by Indoor Unit	Fed by Indoor Unit
PHASE		Single	Single
SYSTEM POWER INPUT (kW)	Cooling (nominal)	0.76	1.45
	Cooling (UK)	0.64	1.12
STARTING CURRENT (A)		3.6	6.4
SYSTEM RUNNING CURRENT (A)	Cooling [MAX]	3.6 [9.2]	6.4 [9.2]
FUSE RATING (BS88) – HRC (A)		10	10
MAINS CABLE No. CORES		3	3
MAX PIPE LENGTH (m)		20	20
MAX HEIGHT DIFFERENCE (m)		12	12
CHARGE REFRIGERANT (kg) / CO_2 EQUIVALENT (t) - R32 (GWP 675)		0.85 / 0.57	0.85 / 0.57
MAX ADDITIONAL REFRIGERANT (kg) / CO_2 EQUIVALENT (t) - R32 (GWP 675)		0.13 / 0.09	0.13 / 0.09

Notes: The SHF figures are based on nominal conditions. Requires an additional MAC-334IF-E interface and PAR-40MAA wired remote controller

PRODUCT DIMENSIONS	MSY-TP35/50VF

Front View

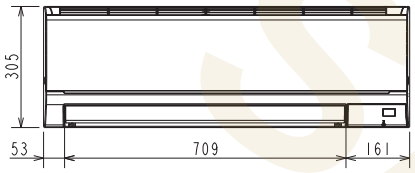

Upper View

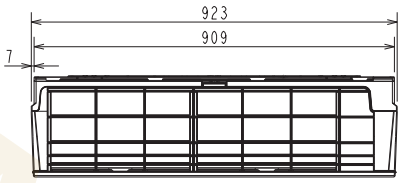

Side View

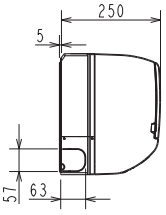

SAMPLE

MITSUBISHI ELECTRIC
Changes for the Better

Telephone: 01707 282880
email: air.conditioning@meuk.mee.com
web: airconditioning.mitsubishielectric.co.uk

UNITED KINGDOM Mitsubishi Electric Europe Living Environment Systems Division
Travellers Lane, Hatfield, Hertfordshire, AL10 8XB, England General Enquiries Telephone: 01707 282880 Fax: 01707 278881
IRELAND Mitsubishi Electric Europe Westgate Business Park, Ballymount, Dublin 24, Ireland
Telephone: Dublin (01) 419 8800 Fax: Dublin (01) 419 8890 International code: (003531)

Green Gateway
www.greengateway.mitsubishielectric.co.uk
Mitsubishi Electric UK's commitment to the environment

Follow us @meuk_les
Follow us @green_gateway
Mitsubishi Electric Living Environmental Systems UK
mitsubishielectric2
thehub.mitsubishielectric.co.uk

Country of origin: United Kingdom – Japan – Thailand – Malaysia. ©Mitsubishi Electric Europe 2018. Mitsubishi and Mitsubishi Electric are trademarks of Mitsubishi Electric Europe B.V. The company reserves the right to make any variation in technical specification to the equipment described, or to withdraw or replace products without prior notification or public announcement. Mitsubishi Electric is constantly developing and improving its products. All descriptions, illustrations, drawings and specifications in this publication present only general particulars and shall not form part of any contract. All goods are supplied subject to the Company's General Conditions of Sale, a copy of which is available on request. Third-party product and brand names may be trademarks or registered trademarks of their respective owners.

Note: The fuse rating is for guidance only. Please refer to the relevant databook for detailed specification. It is the responsibility of a qualified electrician/electrical engineer to select the correct cable size and fuse rating based on current regulation and site specific conditions. Mitsubishi Electric's air conditioning equipment and heat pump systems contain a fluorinated greenhouse gas, R410A (GWP:2088), R32 (GWP:675), R407C (GWP:1774) or R134a (GWP:1430). *These GWP values are based on Regulation (EU) No 517/2014 from IPCC 4th edition. In case of Regulation (EU) No.626/2011 from IPCC 3rd edition, these are as follows. R410A (GWP:1975), R32 (GWP: 550), R407C (GWP:1650) or R134a (GWP:1300).

Effective as of December 2018

4. Manufacturer Product Data Sheets

4.25

Mitsubishi Electric Wall Mounted AC System

Source file: MSZ-AP_Product_Information_Sheet_2019.pdf

SAMPLE

Air Conditioning

Product Information

MSZ-AP R32 Wall Mounted System
Inverter Heat Pump

Making a World of Difference

M series

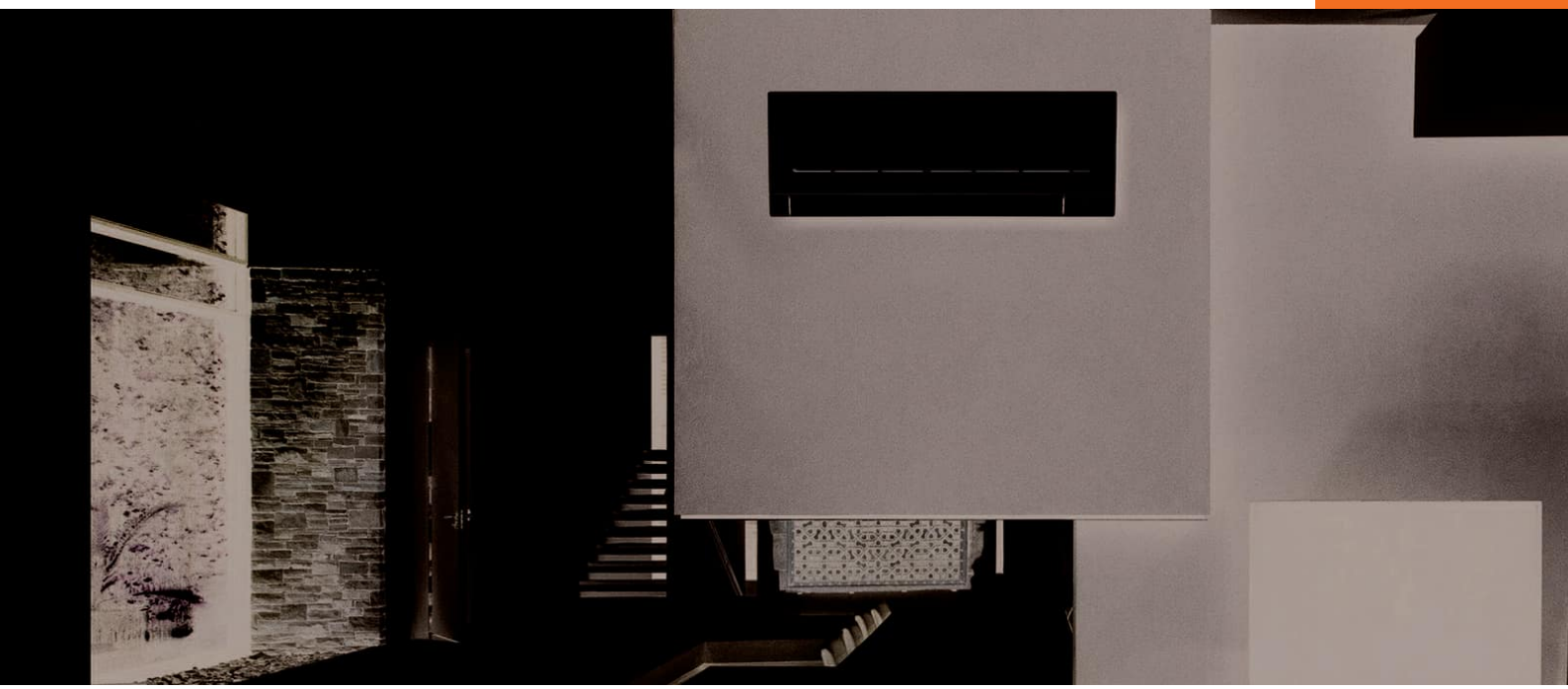

The **MSZ–AP** range is a wall mounted system that blends energy efficiency with a modern white design. Boasting outstanding benefits, this mid-range unit includes state-of-the-art Wi-Fi control as standard and utilises lower GWP R32 refrigerant.

Key Features

- Compact and stylish white design
- Quiet operation with industry leading low noise levels
- Highly energy efficient operation, utilising lower GWP R32 refrigerant
- Built in Wi-Fi interface enabling control and monitoring via the MELCloud app (MSZ-AP25/35/50/60/71VGK)
- Double vanes to distribute airflow evenly throughout the room
- Weekly timer provides greater control of scheduling
- Incorporates Replace Technology, allowing the upgrade of systems utilising existing piping

SAMPLE

MITSUBISHI ELECTRIC

R32

Cooling | Heating | Ventilation | Controls

Air Conditioning

Product Information

MSZ-AP R32 Wall Mounted System
Inverter Heat Pump

Making a World of Difference





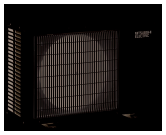
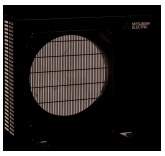


MSZ-AP - INDOOR UNITS		MSZ-AP15VG	MSZ-AP20VG	MSZ-AP25VG(K)	MSZ-AP35VG(K)	MSZ-AP42VG	MSZ-AP50VG(K)	MSZ-AP60VG(K)	MSZ-AP71VG(K)
CAPACITY (KW)	Heating (nominal)	1.7 (1.2-3.0)	2.0 (0.6-2.7)	2.5 (0.9-3.4)	4.0 (1.6-4.3)	5.4 (1.3-6.0)	5.8 (1.4-7.3)	6.8 (2.0-8.6)	8.0 (2.2-10.3)
	Cooling (nominal)	1.5 (0.9-2.7)	2.06 (0.4-2.9)	2.64 (0.8-3.4)	3.5 (1.1-3.8)	4.2 (0.9-4.5)	5.0 (1.4-5.4)	6.1 (1.4-7.3)	7.1 (2.0-8.7)
	Heating (UK)	-	1.98 (0.6-2.7)	2.48 (0.9-3.4)	3.3 (1.1-3.8)	4.45 (1.1-4.9)	4.78 (1.2-6.0)	5.6 (1.6-7.1)	6.68 (1.8-8.6)
	Cooling (UK)	-	0.80	0.92	3.47 (1.1-3.8)	4.17 (0.9-4.5)	4.95 (1.4-5.3)	6.05 (1.4-7.2)	7.04 (2.0-8.6)
SHF (nominal)		-	4.17 / 4.35	4.10 / 4.17	0.88	0.77	0.74	0.83	0.77
COP / EER (nominal)		-	4.10 / 8.60	4.80 / 8.60	3.88 / 3.54	3.62 / 3.23	3.63 / 3.23	4.07 / 3.84	3.82 / 3.53
SCOP / SEER (BS EN14825)		-	A+ / A+++	A++ / A+++	4.70 / 8.60	4.70 / 7.80	4.70 / 7.40	4.60 / 7.40	4.40 / 7.20
ErP ENERGY EFFICIENCY CLASS	Heating/Cooling	62-73-83-100-113	62-73-83-100-122	82-98-122-148-215	A++ / A+++	A++ / A++	A++ / A++	A++ / A++	A+ / A++
AIRFLOW (l/s)	Heating (SLo-Lo-Mid-Hi-SHi)	58-65-77-92-107	58-65-77-92-115	82-98-118-145-190	82-98-122-148-215	88-102-128-157-233	93-108-137-167-233	180-223-257-290-338	170-192-220-255-320
	Cooling (SLo-Lo-Mid-Hi-SHi)	9.52 (3/8")	9.52 (3/8")	9.52 (3/8")	82-98-118-145-190	90-108-128-155-190	100-120-140-167-210	157-183-220-267-315	160-192-220-255-310
PIPE SIZE MM (in)	Gas	6.35 (1/4")	6.35 (1/4")	6.35 (1/4")	9.52 (3/8")	9.52 (3/8")	9.52 (3/8")	12.7 (1/2")	12.7 (1/2")
	Liquid	21-26-30-35-40	21-26-30-35-42	19-24-34-39-45	6.35 (1/4")	6.35 (1/4")	6.35 (1/4")	6.35 (1/4")	6.35 (1/4")
SOUND PRESSURE LEVEL (dBA)	Heating (SLo-Lo-Mid-Hi-SHi)	21-26-30-35-40	21-26-30-35-42	19-24-30-36-42	19-24-31-38-45	21-29-35-40-45	28-33-38-43-48	30-37-41-45-48	30-37-41-45-51
	Cooling (SLo-Lo-Mid-Hi-SHi)	59	60	57	19-24-30-36-42	21-29-34-38-42	28-33-36-40-44	30-37-41-45-48	30-37-41-45-49
SOUND POWER LEVEL (dBA)		760 x 178 x 250	760 x 178 x 250	798 x 219 x 299	57	57	58	65	65
DIMENSIONS (mm)	Width x Depth x Height	8.2	8.2	10.5	798 x 219 x 299	798 x 219 x 299	798 x 219 x 299	1100 x 257 x 325	1100 x 257 x 325
WEIGHT (kg)		Fed by Outdoor Unit	Fed by Outdoor Unit	Fed by Outdoor Unit	10.5	10.5	10.5	16	17
ELECTRICAL SUPPLY		6	6	6	Fed by Outdoor Unit	Fed by Outdoor Unit	Fed by Outdoor Unit	Fed by Outdoor Unit	Fed by Outdoor Unit
FUSE RATING (BS88) - HRC (A)		4	4	4	6	6	6	6	6
INTERCONNECTING CABLE No. CORES					4	4	4	4	4

Notes: MSZ-AP15VG only available with R32 MXZ Multi-Split outdoor units. MSZ-AP-VGK indoor units include built-in Wi-Fi adaptor.

MUZ-AP - OUTDOOR UNITS		MULTI-SPLIT ONLY	MUZ-AP20VG	MUZ-AP25VG	MUZ-AP35VG	MUZ-AP42VG	MUZ-AP50VG	MUZ-AP60VG	MUZ-AP71VG
SOUND PRESSURE LEVEL (dBA)	Heating/Cooling	-	48 / 47	48 / 47	50 / 49	51 / 50	52 / 52	57 / 56	55 / 55
SOUND POWER LEVEL (dBA)	Cooling	-	59	59	61	61	64	65	65
WEIGHT (kg)		-	31	31	31	35	40	40	55
DIMENSIONS (mm)	Width x Depth x Height	-	800 x 285 x 550	800 x 285 x 550	800 x 285 x 550	800 x 285 x 550	800 x 285 x 714	800 x 285 x 714	840 x 330 x 880
ELECTRICAL SUPPLY		-	220-240v, 50Hz	220-240v, 50Hz	220-240v, 50Hz	220-240v, 50Hz	220-240v, 50Hz	220-240v, 50Hz	220-240v, 50Hz
PHASE		-	Single	Single	Single	Single	Single	Single	Single
SYSTEM POWER INPUT (kW)	Heating/Cooling (nominal)	-	0.60 / 0.46	0.78 / 0.60	1.03 / 0.99	1.49 / 1.30	1.60 / 1.55	1.67 / 1.59	2.12 / 2.01
	Heating/Cooling (UK)	-	0.52 / 0.38	0.70 / 0.50	0.93 / 0.83	1.34 / 1.09	1.44 / 1.29	1.51 / 1.33	1.91 / 1.68
STARTING CURRENT (A)		-	3.2	3.6	4.7	6.6	7.0	7.4	9.3
SYSTEM RUNNING CURRENT (A)	Heating/Cooling [MAX]	-	3.2 / 2.6 [7.0]	3.6 / 2.9 [7.06]	4.7 / 4.5 [8.46]	6.6 / 5.8 [9.6]	7.0 / 6.9 [13.6]	7.4 / 7.1 [14.0]	9.3 / 8.8 [16.4]
FUSE RATING (BS88) – HRC (A)		-	10	10	10	10	16	16	20
MAINS CABLE No. CORES		-	3	3	3	3	3	3	3
MAX PIPE LENGTH (m)		-	20	20	20	20	20	30	30
MAX HEIGHT DIFFERENCE (m)		-	12	12	12	12	12	15	15
CHARGE REFRIGERANT (kg) / CO_2 EQUIVALENT (t) - R32 (GWP 675) - 7m		-	0.55 / 0.38	0.55 / 0.37	0.55 / 0.37	0.70 / 0.47	1.00 / 0.68	1.05 / 0.71	1.50 / 1.02
MAX ADDITIONAL REFRIGERANT (kg) / CO_2 EQUIVALENT (t) - R32 (GWP 675)		-	0.26 / 0.18	0.26 / 0.18	0.26 / 0.18	0.26 / 0.18	0.26 / 0.18	0.30 / 0.21	0.30 / 0.21

PRODUCT DIMENSIONS

MSZ-AP15-20VG

Upper View



Front View

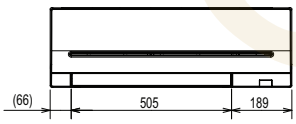

MSZ-AP25-50VG(K)

Upper View

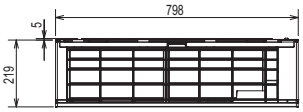

Front View



MSZ-AP60-71VG(K)

Upper View

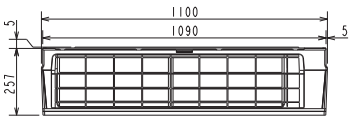

Front View

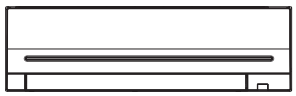

SAMPLE

MITSUBISHI ELECTRIC
Changes for the Better

Telephone: 01707 282880
email: air.conditioning@meuk.mee.com
web: airconditioning.mitsubishielectric.co.uk

UNITED KINGDOM Mitsubishi Electric Europe Living Environment Systems Division
Travellers Lane, Hatfield, Hertfordshire, AL10 8XB, England General Enquiries Telephone: 01707 282880 Fax: 01707 278881
IRELAND Mitsubishi Electric Europe Westgate Business Park, Ballymount, Dublin 24, Ireland
Telephone: Dublin (01) 419 8800 Fax: Dublin (01) 419 8890 International code: (003531)

Green Gateway
www.greengateway.mitsubishielectric.co.uk
Mitsubishi Electric UK's commitment to the environment

Follow us @meuk_les
Follow us @green_gateway
Mitsubishi Electric Living Environmental Systems UK
mitsubishielectric2
BLOG thehub.mitsubishielectric.co.uk

Country of origin: United Kingdom – Japan – Thailand – Malaysia. ©Mitsubishi Electric Europe 2019. Mitsubishi and Mitsubishi Electric are trademarks of Mitsubishi Electric Europe B.V. The company reserves the right to make any variation in technical specification to the equipment described, or to withdraw or replace products without prior notification or public announcement. Mitsubishi Electric is constantly developing and improving its products. All descriptions, illustrations, drawings and specifications in this publication present only general particulars and shall not form part of any contract. All goods are supplied subject to the Company's General Conditions of Sale, a copy of which is available on request. Third-party product and brand names may be trademarks or registered trademarks of their respective owners.

Note: The fuse rating is for guidance only. Please refer to the relevant databook for detailed specification. It is the responsibility of a qualified electrician/electrical engineer to select the correct cable size and fuse rating based on current regulation and site specific conditions. Mitsubishi Electric's air conditioning equipment and heat pump systems contain a fluorinated greenhouse gas, R410A (GWP:2088), R32 (GWP:675), R407C (GWP:1774) or R134a (GWP:1430). *These GWP values are based on Regulation (EU) No 517/2014 from IPCC 4th edition. In case of Regulation (EU) No.626/2011 from IPCC 3rd edition, these are as follows. R410A (GWP:1975), R32 (GWP: 550), R407C (GWP:1650) or R134a (GWP:1300).

Effective as of May 2019

4. Manufacturer Product Data Sheets

4.26

Turnbull & Scott Electric Over Door

Source file: ODH-Brochure-022021.pdf

SAMPLE

Electric Over Door Heater

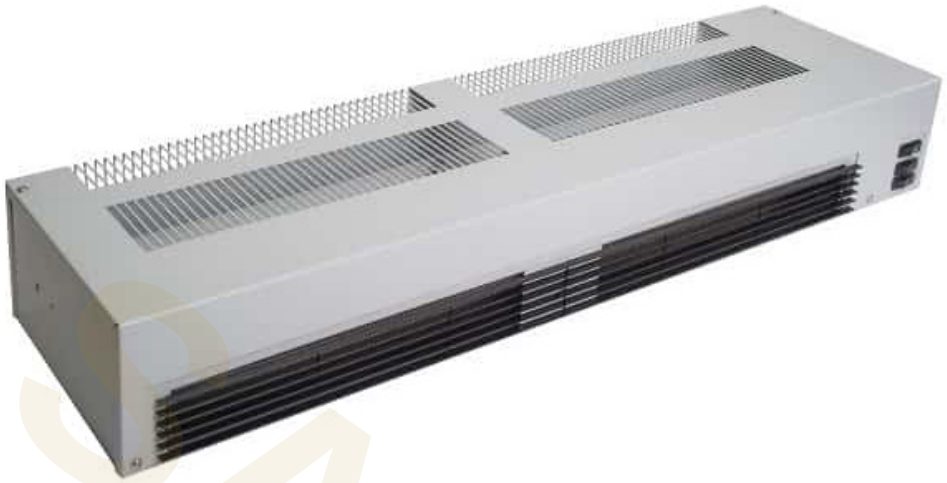

Turnbull & Scott™
Trusted.

SAMPLE

ODH | Electric Over Door Heater



APPLICATIONS

Our over door heaters provide a warm welcome for those entering by warming the air around the entrance area to create a pleasant room environment. A powerful fan heater, the over door heater is designed for use above frequently opened doors, to limit the egress of heated air and the ingress of cold air.

Typical installations include shops, entrance halls, offices, and workshop/warehouse doors. The fully adjustable bracket also allows the use of the over door heater for general space heating applications where a high level heater is required.

FEATURES

- 3kW, 4.5kW, 6kW and 9kW units available
- Adjustable bracket for wall or ceiling mounting
- Alternative keyhole fixing for secure installation
- Integral switches for heat selection and fan only
- Optional remote switch unit (ODH-RSW)
- Pre-connected cable for ease of installation (ODH-3000 and ODH-4500 only)
- ODH-9000 for 230V or 400V
- White powder coated finish (RAL9003)
- Other colour options available on request (subject to quantities ordered)



ODH Electric Over Door Heater



ODH-RSW Remote Switch Unit

EXEMPT

ODH | Electric Over Door Heater

CONTROL

TEMPERATURE Control is via rocker switches next to the outlet grille.

ODH-3000 Switch for fan only, 1kW, 2kW and 3kW.

ODH-3000R Switches for 1kW, 2kW and 3kW. The ODH-RSW remote switch can be connected to give on/off fan only and heat selection.

ODH-4500 Fan only control is achieved by switching of the main power supply switch. Switches for 2.25kW and 4.5kW.

ODH-4500R Switches for 2.25kW 4.5kW. The ODH-RSW remote switch can be connected to give on/off fan only and heat selection.

ODH-6000 Switches for fan only 3kW and 6kW. The ODH-RSW remote switch can be connected to give on/off fan only and heat selection.

ODH-9000 ODH-9000 Switches for fan only 4.5kW and 9kW. The ODH-RSW remote switch can be connected to give on/off fan only and heat selection.

The ODH-3000 and ODH-4500 can be controlled by remote thermostat and/or time controller of suitable rating connected in the main supply line. The ODH-6000 and ODH-9000 can be controlled by remote thermostat and/or time controller of suitable rating in the heat control circuit.

TECHNICAL SPECIFICATON

Product Code	Application Type	kW	Volts	Length mm	Length Between Fixings mm	Height mm	Depth mm	Weight kgs
ODH-3000	Integral switching	3	230	600	505	220	120	5
OHD-3000R	For remote switching	3	230	600	505	220	120	5
ODH-4000	Integral switching	4.5	230	600	505	220	120	5
ODH-4500R	For remote swtiching	4.5	230	600	505	220	120	5
ODH-6000	Integral & remote switching	6	230	850	800	220	120	12
ODH-9000	Integral & remote switching	9	230/400	1235	1185	220	120	15
ODH-RSW	Remote switch unit (hard wired) required for remote switching							

EXAMPLE

ODH | Electric Over Door Heater

INSTALLATION

For optimum effect the heater should be mounted as close as possible to the top of the doorway. The maximum recommended mounting height is 2.3m for 3kW and 2.8m for 4.5kW, 6kW and 9kW units. Multiple units mounted side by side can be used for wider doorways.

The unit should be securely fixed using the keyhole slots in the back of the unit or the adjustable mounting bracket. The mounting brackets allow easy wall or ceiling mounting.

To reduce the ingress of cold air from a constantly opening door the unit should be directed down. To contribute to the general space heating of the area the unit should be directed at an angle into the area.

ODH-3000 and ODH-4500 are supplied with a pre-connected cable for quick connection, the ODH-3000R, ODH-4500R, ODH-6000 and ODH-9000 are supplied with a cable grip gland or can be connected by conduit if preferred.

The 3kW should be connected to a suitably fused power supply. The 4.5kW, 6kW and 9kW must be connected directly to the power distribution board. Connection should be via a 2 pole switched connection unit having a contact separation of at least 3mm in all poles.

All electrical connections should be made by a suitably qualified person in accordance with the latest edition of the IEE Requirements for Electrical Installation (BS 7671:2008).

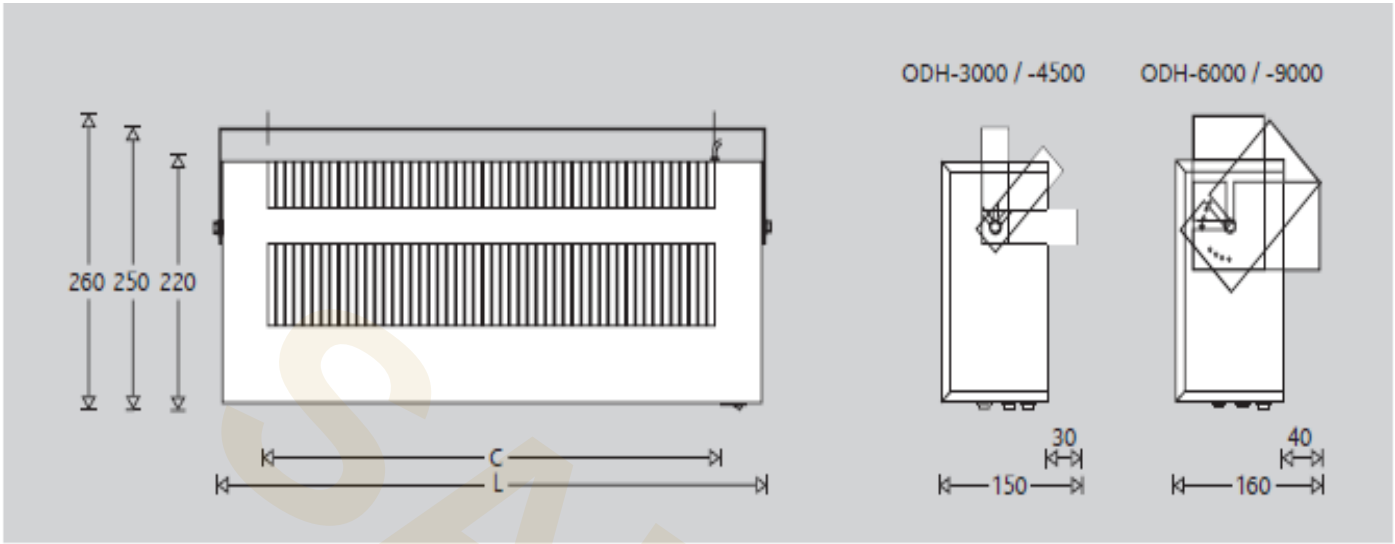

SAMPLE

Burnfoot Industrial Estate
Roxburghshire,
Scotland, TD9 8SL

www.turnbull-scott.co.uk

01450 372 103

SAMPLE

4. Manufacturer Product Data Sheets

4.27

Collingwood 600x600 LED Panel 30W

Source file: P2A19_30W 600x600 Grid Lighting (A & AE).pdf

SAMPLE

PANELS SPECIFICATION SHEET



SOLIS 600X600

600 x 600 LED panel

FEATURES

IK rating	IK02
IP rating	IP40
Colour flexibility	Fixed colour
UGR	<19 <22
Sensor	No
Dimmable	DALI 2 = Oui 1-10V = Oui
Input	220-240V 50/60Hz
LED Lifetime	50 000h L70B50
CRI	>80Ra
SDCM	3
Flicker Free	Yes
Emergency version available	Yes, using CWD LEDEP10 (sold separately)

INSTALLATION INFORMATION

Install Connector Type	Integrated terminals
Insulation Coverable	Yes, contact us at 01604 495 151
Bathroom zone	-
Inrush Current	<50A, 0.05ms
Construction Material	PS(P2) / PC(P3) Aluminium Painted Steel
Weight	UGR19- 2000g UGR22- 1750g
Maximum ambient temperature	40°C
SELV	Yes
Building regulations	Part P & L
Electric Class (1, 2, 3)	2

PHOTOMETRICS @ 25°C

Product code	Finish	Feature I	Feature II	Feature III	Wattage	Colour	Beam angle	lm	lm/W	EM lm
P2A19S30W	Matt white	30W	Non dimmable	UGR19 TP(a)	30W	4000K	90°	3300	110	220lm
P2A19S40W	Matt white	40W	Non dimmable	UGR19 TP(a)	40W	4000K	90°	4400	110	220lm
P2A19D30W	Matt white	30W	DALI 2	UGR19 TP(a)	30W	4000K	90°	3300	110	220lm
P2A19D40W	Matt white	40W	DALI 2	UGR19 TP(a)	40W	4000K	90°	4400	110	220lm
P2A19V30W	Matt white	30W	1-10V	UGR19 TP(a)	30W	4000K	90°	3300	110	220lm
P2A19V40W	Matt white	40W	1-10V	UGR19 TP(a)	40W	4000K	90°	4400	110	220lm
P2A22S30W	Matt white	30W	Non dimmable	UGR22 TP(b)	30W	4000K	110°	3300	110	220lm
P2A22S40W	Matt white	40W	Non dimmable	UGR22 TP(b)	40W	4000K	110°	4400	110	220lm
P2A22D30W	Matt white	30W	DALI 2	UGR22 TP(b)	30W	4000K	110°	3300	110	220lm
P2A22D40W	Matt white	40W	DALI 2	UGR22 TP(b)	40W	4000K	110°	4400	110	220lm
P2A22V30W	Matt white	30W	1-10V	UGR22 TP(b)	30W	4000K	110°	3300	110	220lm
P2A22V40W	Matt white	40W	1-10V	UGR22 TP(b)	40W	4000K	110°	4400	110	220lm

WIRING INFORMATION

Cable / Flying Lead	0.75-1.5mm²
Type of Wiring Required	Parallel

COLLINGWOOD
LIGHTING

01604 495 151
collingwoodlighting.com

/collingwoodlighting
/collingwoodlighting
collingwoodled

GUARANTEE / WARRANTY

5 years extended guarantee
2 year on-site guarantee

FEATURES & BENEFITS

Low glare for visual comfort

Each panel is compatible with our three-hour non-maintained emergency pack

Installation is quick and easy

Meets Blue Light Hazard Regulation RG0

Available in both TP(a) and TP (b) to suit your preference

Suitable for reading, writing, meetings and computer-based work

Supplied with 1m long safety steel cable

Glow Wire Test:
P2 panels - 650°C
P3 panels - 850°C

Lumens in EM mode: 220lm

Light source energy efficiency:



Beam angle: 90°

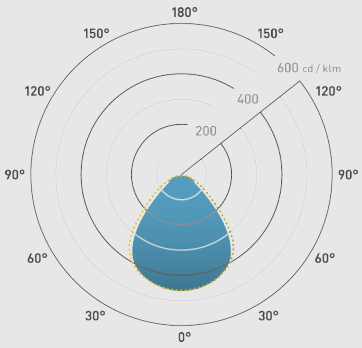

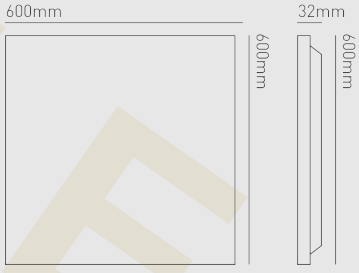

SAMPLE

ACCESSORIES

LEDEP10	3hr non-maintained self-test emergency pack	Sold separately
P2SMA	Surface mount kit for 600 x 600 LED Panel.	Sold separately
P1SK	Suspension Kit for 600 x 600 & 1200 x 300 Panels.	Sold separately

SAMPLE

COLLINGWOOD
LIGHTING

01604 495 151
collingwoodlighting.com

/collingwoodlighting

/collingwoodlighting

collingwoodled

SOLIS 600X600

The Solis range brings all the benefits of LED lighting to a conventional ceiling panel design, ideal for large open-plan commercial areas such as offices, shops, reception areas, schools and universities. Using these competitively priced but superior quality LED panels instead of traditional fluorescent light sources can lead to efficiency savings of over 60%. This comes at no compromise to the quality and performance of the light, which is of utmost importance in a workplace environment. The panels are low-glare UGR <=19 for ultimate visual comfort.
Available in 600mm x 600mm, 1200mm x 600mm and 1200mm x 300mm panels. Features include IP40 rating, a plug and play connector for easy installation and market leading efficacy of 110lm/W. There are also non-dimmable, 1-10V and DALI dimming options for ultimate versatility.

4. Manufacturer Product Data Sheets

4.28

Hager 4-Pin Plug White

Source file: P64AX.pdf

SAMPLE



P64AX

IP20

4 Pin Plug White

Technical characteristics

Architecture	
Number of poles	4 P
Main electrical features	
Rated operational voltage Ue	207 / 230 / 253 V
Rated current	6 A
Materials	
Colour	pure white
Equipment	
Number of terminations -plugs	4
Contact Material	Phosphor Bronze
Use	
Mechanical Load	5 Kg maximum
Safety	
Inflammability	UL 94 V0
Identification	
Application, usage	Light control

SAMPLE

4. Manufacturer Product Data Sheets

4.29

Mitsubishi Electric Large Capacity Ducted Indoor

Source file: PEA-M-R32-Power-Inverter-Heat-Pump-PI-SHEET.pdf

SAMPLE

Air Conditioning | Product Information

MITSUBISHI ELECTRIC

PEA-M

R32 Large Capacity Ceiling Concealed Ducted System

Power Inverter Heat Pump (Three Phase)

Mr.SLIM™

The **PEA-M** large capacity ducted system offers the ultimate in flexibility for larger scale heating and cooling applications. Our latest version works with even greater lengths of ductwork through a 200Pa fan setting making it ideal for warehouse, atria and large retail applications.

R32

POWER INVERTER

Key Features & Benefits:

- Ultimate ductwork flexibility through 5 static pressure settings up to 200Pa
- Lower energy consumption through high efficiency indoor and outdoor units
- Easier system installation with 100m pipe run
- Utilises lower GWP R32 refrigerant



Air Conditioning | **Product Information**

PEA-M
R32 Large Capacity Ceiling Concealed Ducted System Power Inverter Heat Pump (Three Phase)







PEA-M INDOOR UNITS		PEA-M200LA	PEA-M250LA
CAPACITY (kW)	Heating (nominal)	22.4 (7.1-25.0)	27.0 (7.3-31.0)
	Cooling (nominal)	19.0 (9.2-22.4)	22.0 (9.9-27.0)
	Heating (UK)	16.8 (5.3-18.8)	20.3 (5.5-23.3)
	Cooling (UK)	16.5 (8.0-19.5)	19.1 (8.6-23.5)
SHF (nominal)		0.80	0.79
COP / EER (nominal)		3.50 / 3.30	3.40 / 3.05
SCOP (ηsh) / SEER (ηsc) (BS EN14825)		3.61 (141.5%) / 5.87 (231.9%)	3.57 (139.7%) / 5.41 (213.3%)
AIRFLOW (l/s) (150Pa)	Lo-Mi-Hi	700-850-1000	750-917-1083
PIPE SIZE mm (in)	Gas	28.58 (1 1/8")	28.58 (1 1/8")
	Liquid	9.52 (3/8")	12.7 (1/2")
EXTERNAL STATIC PRESSURE (Pa)		60 / 75 / 100 / 150 / 200	60 / 75 / 100 / 150 / 200
SOUND PRESSURE LEVEL (dBA) (60Pa)	Lo-Mi-Hi	35 - 40 - 43	38 - 43 - 47
SOUND POWER LEVEL (dBA) (60Pa)	Lo-Mi-Hi	63 - 64 - 64	67 - 67 - 68
DIMENSIONS (mm)	Width x Depth x Height	1370 x 1120 x 470	1370 x 1120 x 470
WEIGHT (kg)		87	87
ELECTRICAL SUPPLY		220-240V, 50Hz	220-240V, 50Hz
PHASE		Single	Single
POWER INPUT (kW)		0.35	0.53
RUNNING CURRENT (A) [MAX]		3.1	3.4
FUSE RATING (BS88) - HRC (A)		6	6
MAINS CABLE No. Cores		3	3
INTERCONNECTING CABLE	No. Cores	3	3
WIRED REMOTE CONTROLLER REFERENCE		PAR-40MAA	PAR-40MAA

PUZ-ZM OUTDOOR UNITS		PUZ-ZM200YKA	PUZ-ZM250YKA
SOUND PRESSURE LEVEL (dBA)	Heating/Cooling	62 / 59	62 / 59
WEIGHT (kg)		137	138
DIMENSIONS (mm)	Width x Depth x Height	1050 x 330+40 x 1338	1050 x 330+40 x 1338
PIPE SIZE mm (in)	Gas	28.58 (1 1/8")	28.58 (1 1/8")
	Liquid	9.52 (3/8")	12.7 (1/2")
ELECTRICAL SUPPLY		380-415v, 50Hz	380-415v, 50Hz
PHASE		Three	Three
SYSTEM POWER INPUT (kW)	Heating/Cooling (nominal)	6.40 / 5.76	7.94 / 7.21
	Heating/Cooling (UK)	5.18 / 4.89	6.43 / 6.13
STARTING CURRENT (A)		5	5
SYSTEM RUNNING CURRENT (A)	Heating/Cooling [MAX]	9.57 / 8.58 [22.5]	13.3 / 11.6 [22.5]
FUSE RATING (BS88) - HRC (A)		25	25
MAINS CABLE No. CORES		5	5
MAX PIPE LENGTH (m)		100	100
MAX HEIGHT DIFFERENCE (m)		30	30
CHARGE REFRIGERANT (kg) / CO_2 EQUIVALENT (t)	R32 (GWP 675) - 30m	6.3 / 4.25	6.8 / 4.59
MAX ADDITIONAL REFRIGERANT (kg) / CO_2 EQUIVALENT (t)	R32 (GWP 675)	2.9 / 1.96	2.4 / 1.62

PEA-M DIMENSIONS

FRONT VIEW

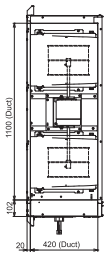

UPPER VIEW

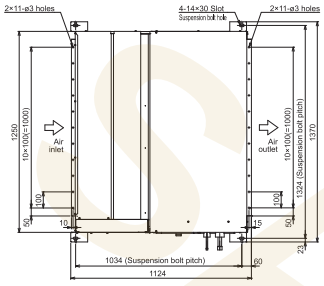

SIDE VIEW

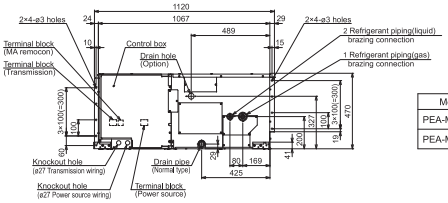

Model	① Gas pipe	② Liquid pipe	③ Drain hose
PEA-M200LA	ø25.4	ø9.52	Drain hose 32mm <flexible joint> <accessory>
PEA-M250LA		ø12.7	

MITSUBISHI ELECTRIC
Changes for the Better

Telephone: **01707 282880**
email: **air.conditioning@meuk.mee.com**
les.mitsubishielectric.co.uk

@meuk_les
@green_gateway
Mitsubishi Electric Living Environmental Systems UK
Mitsubishi Electric Cooling and Heating UK
mitsubishielectricuk_les
Mitsubishi Electric Living Environmental Systems UK
BLOG thehub.mitsubishielectric.co.uk

UNITED KINGDOM Mitsubishi Electric Europe Living Environment Systems Division, Travellers Lane, Hatfield, Hertfordshire, AL10 8XB, England. Telephone: 01707 282880 Fax: 01707 278881
IRELAND Mitsubishi Electric Europe, Westgate Business Park, Ballymount, Dublin 24, Ireland. Telephone: (01) 419 8800 Fax: (01) 419 8890 International code: (003531)

Country of origin: United Kingdom - Japan - Thailand - Malaysia. ©Mitsubishi Electric Europe 2021. Mitsubishi and Mitsubishi Electric are trademarks of Mitsubishi Electric Europe B.V. The company reserves the right to make any variation in technical specification to the equipment described, or to withdraw or replace products without prior notification or public announcement. Mitsubishi Electric is constantly developing and improving its products. All descriptions, illustrations, drawings and specifications in this publication present only general particulars and shall not form part of any contract. All goods are supplied subject to the Company's General Conditions of Sale, a copy of which is available on request. Third-party product and brand names may be trademarks or registered trademarks of their respective owners.

Note: The fuse rating is for guidance only. Please refer to the relevant databook for detailed specification. It is the responsibility of a qualified electrician/electrical engineer to select the correct cable size and fuse rating based on current regulation and site specific conditions. Mitsubishi Electric's air conditioning equipment and heat pump systems contain a fluorinated greenhouse gas, R410A (GWP:2088), R32 (GWP:675), R407C (GWP:1774), R134a (GWP:1430), R513A (GWP:631), R454B (GWP:466), R1234ze (GWP:7) or R1234yf (GWP:4). *These GWP values are based on Regulation (EU) No 517/2014 from IPCC 4th edition. In case of Regulation (EU) No.626/2011 from IPCC 3rd edition, these are as follows. R410A (GWP:1975), R32 (GWP:550), R407C (GWP:1650) or R134a (GWP:1300).

Effective as of March 2021

Green Gateway greengateway.mitsubishielectric.co.uk

4. Manufacturer Product Data Sheets

4.30

Mitsubishi Electric Large Ceiling Cassette AC

Source file: PLA-M_R32_Standard_Inverter__SP__Product_Information_Sheet_2019-1.pdf

SAMPLE

Air Conditioning

Product Information

PLA-M R32
4-Way Blow Ceiling Cassette System
Standard Inverter Heat Pump
Single Phase

Making a World of Difference

Mr.SLIM



The **PLA-M** Standard Inverter range is a ceiling cassette system that blends a host of outstanding features with a sophisticated streamlined design. Offering advanced control options and quiet operation, this range provides extreme flexibility and ease of installation whilst being cost effective.

Key Features

- Improved airflow control, including horizontal airflow for greater comfort
- Optional 3D i-see sensor grille (PLP-6EAE) provides customised comfort by automatically monitoring room occupancy, position and body temperatures
- Optional filter lowering operation down to 4m (PLP-6EAJ)
- Replace Technology available
- New single fan chassis on 12.5 and 14kW models

SAMPLE

MITSUBISHI ELECTRIC

Cooling | Heating | Ventilation | Controls

R32

Air Conditioning

Product Information

PLA-M R32
4-Way Blow Ceiling Cassette System
Standard Inverter Heat Pump
Single Phase

Making a World of Difference

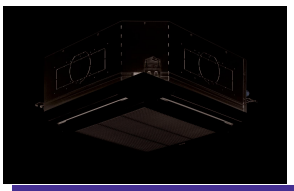







PLA-M - INDOOR UNITS		PLA-M35EA	PLA-M50EA	PLA-M60EA	PLA-M71EA	PLA-M100EA	PLA-M125EA	PLA-M140EA
CAPACITY (kW)	Heating (nominal)	4.1 (1.0-5.0)	6.0 (1.5-7.2)	7.0 (1.6-8.0)	8.0 (2.0-10.2)	9.5 (4.0-10.6) 11.2 (2.8-12.5)	13.5 (4.1-15.0)	15.0 (4.2-15.8)
	Cooling (nominal)	3.6 (0.8-3.9)	5.5 (1.2-5.6)	6.1 (1.6-6.3)	7.1 (2.2-8.1)	9.63 (2.41-10.75)	12.1 (5.8-13.0)	13.4 (5.8-14.1)
	Heating (UK)	3.49 (0.85-4.26)	5.11 (1.28-6.13)	6.13 (1.36-6.81)	6.81 (1.70-8.68)	8.65 (3.64 - 9.65)	11.49 (3.49-12.77)	12.77 (3.57-13.45)
	Cooling (UK)	3.31 (0.74-3.60)	5.06 (1.10-5.15)	5.61 (1.47-5.80)	6.53 (2.02-7.45)	0.77	11.01 (5.28-11.83)	12.19 (5.28-12.83)
SHF (nominal)		0.91	0.77	0.79	0.74	3.71 / 3.50	0.72	0.70
COP / EER (nominal)		4.20 / 4.00	3.46 / 3.40	3.80 / 3.30	3.61 / 3.70	4.60 / 7.00	3.71 / 3.01	3.41 / 2.70
SCOP (ηsh) / SEER (ηsc) (BS EN14825)		4.70 / 7.40	4.10 / 6.70	4.40 / 6.60	4.50 / 7.50	A++ / A++	4.1 (162%) / 5.6 (231.9%)	4.1 (161.3%) / 5.7 (232.7%)
ErP ENERGY EFFICIENCY CLASS	Heating/Cooling	A++ / A++	A+ / A++	A+ / A++	A+ / A++	317-383-433-483	A+ / A+	A+ / A+
AIRFLOW (l/s)	Lo-Mi-Mi2-Hi	183-217-250-267	200-233-317-350	200-233-317-350	233-283-317-350	15.88 (5/8") / 9.52 (3/8")	350-417-467-517	400-433-483-533
PIPE SIZE mm (in)	Gas/Liquid	9.52 (3/8") / 6.35 (1/4")	12.7 (1/2") / 6.35 (1/4")	15.88 (5/8") / 6.35 (1/4")	15.88 (5/8") / 9.52 (3/8")	31-34-37-40	15.88 (5/8") / 9.52 (3/8")	15.88 (5/8") / 9.52 (3/8")
SOUND PRESSURE LEVEL (dBA)	Lo-Mi-Mi2-Hi	26-28-29-31	27-29-31-32	27-29-31-32	28-30-32-34	61	33-37-41-44	36-39-42-44
SOUND POWER LEVEL (dBA)		51	54	54	56		65	65
DIMENSIONS (mm)	Width x Depth x Height (Grille)	840 (950) x 840 (950) x 258 (40)	840 (950) x 840 (950) x 258 (40)	840 (950) x 840 (950) x 258 (40)	840 (950) x 840 (950) x 258 (40)	840 (950) x 840 (950) x 298 (40)	840 (950) x 840 (950) x 298 (40)	840 (950) x 840 (950) x 298 (40)
WEIGHT (kg)	Unit / Panel	19 / 5	19 / 5	21 / 5	21 / 5	24 / 5	26 / 5	26 / 5
ELECTRICAL SUPPLY		Fed by Outdoor Unit	Fed by Outdoor Unit	Fed by Outdoor Unit	Fed by Outdoor Unit	Fed by Outdoor Unit	Fed by Outdoor Unit	Fed by Outdoor Unit
FUSE RATING (BS88) - HRC (A)		6	6	6	6	6	6	6
INTERCONNECTING CABLE No. Cores		4	PLP-6EA	PLP-6EA	PLP-6EA	PLP-6EA	PLP-6EA	PLP-6EA
GRILLE REFERENCE		PLP-6EA	PAR-40MAA	PAR-40MAA	PAR-40MAA	PAR-40MAA	PAR-40MAA	PAR-40MAA
WIRED REMOTE CONTROLLER REFERENCE		PAR-40MAA	PAR-SL100A-E	PAR-SL100A-E	PAR-SL100A-E	PAR-SL100A-E	PAR-SL100A-E	PAR-SL100A-E
WIRELESS REMOTE CONTROLLER REFERENCE		PAR-SL100A-E						

SUZ-M / PUZ-M - OUTDOOR UNITS		SUZ-M35VA	SUZ-M50VA	SUZ-M60VA	SUZ-M71VA	PUZ-M100VKA	PUZ-M125VKA	PUZ-M140VKA
SOUND PRESSURE LEVEL (dBA)	Heating/Cooling	48 / 48	48 / 49	49 / 51	49 / 51	51 / 54	54 / 56	55 / 57
SOUND POWER LEVEL (dBA)	Cooling	59	64	65	66	70	72	73
WEIGHT (kg)		35	41	54	55	76	84	84
DIMENSIONS (mm)	Width x Depth x Height	800 x 285 x 550	800 x 285 x 714	840 x 330 x 880	840 x 330 x 880	1050 x 330 x 981	1050 x 330 x 981	1050 x 330 x 981
ELECTRICAL SUPPLY		220-240v, 50Hz	220-240v, 50Hz	220-240v, 50Hz	220-240v, 50Hz	220-240v, 50Hz	220-240v, 50Hz	220-240v, 50Hz
PHASE		Single	Single	Single	Single	Single	Single	Single
SYSTEM POWER INPUT (kW)	Heating/Cooling (nominal)	0.97 / 0.90	1.73 / 1.61	1.84 / 1.84	2.21 / 1.91	3.01 / 2.71	3.63 / 4.01	4.39 / 4.96
	Heating/Cooling (UK)	0.83 / 0.77	1.47 / 1.39	1.56 / 1.58	1.88 / 1.64	2.71 / 2.50	3.27 / 3.33	3.59 / 4.12
STARTING CURRENT (A)		5.0	8.0	9.3	9.5	13.0	17.4	21.5
SYSTEM RUNNING CURRENT (A)	Heating/Cooling [MAX]	5.0 / 4.1 [8.5]	8.0 / 7.1 [13.5]	9.3 / 8.4 [14.8]	9.5 / 9.1 [14.8]	13.0 / 11.7 [20]	15.6 / 17.4 [26.5]	19.0 / 21.5 [30]
FUSE RATING (BS88) - HRC (A)		10	20	20	20	32	32	40
MAINS CABLE No. Cores		3	3	3	3	3	3	3
MAX PIPE LENGTH (m)		20	30	30	30	55	65	65
MAX HEIGHT DIFFERENCE (m)		12	30	30	30	30	30	30
CHARGE REFRIGERANT (kg) / CO_2 EQUIVALENT (t)	R32 (GWP 675)	0.90 / 0.61	1.20 / 0.81	1.25 / 0.84	1.45 / 0.98	3.10 / 2.09	3.60 / 2.43	3.60 / 2.43
MAX ADDITIONAL REFRIGERANT (kg) / CO_2 EQUIVALENT (t)	R32 (GWP 675)	1.16 / 0.78	1.66 / 1.12	1.71 / 1.15	2.37 / 1.80	4.10 / 2.77	5.00 / 3.38	5.00 / 3.38

Note: No duty/standby operation on SUZ-M35/50/60/71VA.

PRODUCT DIMENSIONS — PLA-M35/50/60/71/100/125/140EA

Lower View

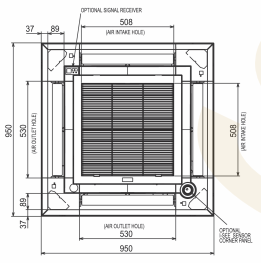

Upper View

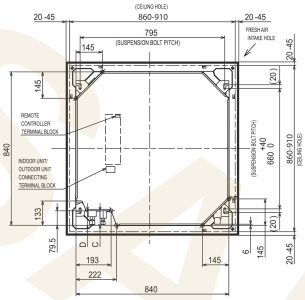

Front View

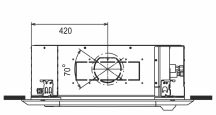

Side View

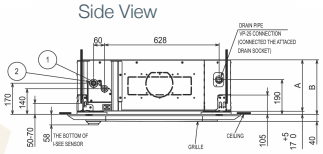

PLA-M.EA*: 35/50/60/71/100/125/140

M	①	②	A	B	C	D
35/50	REFRIGERANT PIPE Φ 6.35 FLARED CONNECTION 1/4F	REFRIGERANT PIPE Φ 12.7 FLARED CONNECTION 1/2F	241	258	76	76.5
60	REFRIGERANT PIPE Φ 6.35 / Φ 9.52 FLARED CONNECTION 1/4F / 3/8F (COMPATIBLE)				80.5	
71		REFRIGERANT PIPE Φ 15.88 FLARED CONNECTION 5/8F				79.5
100-140	REFRIGERANT PIPE Φ 9.52 FLARED CONNECTION 3/8F		281	298	79.5	

SAMPLE

MITSUBISHI ELECTRIC
Changes for the Better

Telephone: 01707 282880
email: air.conditioning@meuk.mee.com
web: airconditioning.mitsubishielectric.co.uk

UNITED KINGDOM Mitsubishi Electric Europe Living Environment Systems Division
Travellers Lane, Hatfield, Hertfordshire, AL10 8XB, England General Enquiries Telephone: 01707 282880 Fax: 01707 278881
IRELAND Mitsubishi Electric Europe Westgate Business Park, Ballymount, Dublin 24, Ireland
Telephone: Dublin (01) 419 8800 Fax: Dublin (01) 419 8890 International code: (003531)

Country of origin: United Kingdom – Japan – Thailand – Malaysia. ©Mitsubishi Electric Europe 2019. Mitsubishi and Mitsubishi Electric are trademarks of Mitsubishi Electric Europe B.V. The company reserves the right to make any variation in technical specification to the equipment described, or to withdraw or replace products without prior notification or public announcement. Mitsubishi Electric is constantly developing and improving its products. All descriptions, illustrations, drawings and specifications in this publication present only general particulars and shall not form part of any contract. All goods are supplied subject to the Company's General Conditions of Sale, a copy of which is available on request. Third-party product and brand names may be trademarks or registered trademarks of their respective owners.

Note: The fuse rating is for guidance only. Please refer to the relevant databook for detailed specification. It is the responsibility of a qualified electrician/electrical engineer to select the correct cable size and fuse rating based on current regulation and site specific conditions. Mitsubishi Electric's air conditioning equipment and heat pump systems contain a fluorinated greenhouse gas, R410A (GWP:2088), R32 (GWP:675), R407C (GWP:1774) or R134a (GWP:1430). *These GWP values are based on Regulation (EU) No 517/2014 from IPCC 4th edition. In case of Regulation (EU) No.626/2011 from IPCC 3rd edition, these are as follows. R410A (GWP:1975), R32 (GWP: 550), R407C (GWP:1650) or R134a (GWP:1300).

Green Gateway
www.greengateway.mitsubishielectric.co.uk
Mitsubishi Electric UK's commitment to the environment

Follow us @meuk_les
Follow us @green_gateway
Mitsubishi Electric Living Environmental Systems UK
mitsubishielectric2
BLOG thehub.mitsubishielectric.co.uk

Effective as of January 2019

4. Manufacturer Product Data Sheets

4.31

Mitsubishi Electric High Capacity AC Outdoor

Source file: PUZ-ZM200-250_R322.pdf

SAMPLE

MITSUBISHI ELECTRIC

PUZ-ZM200/250YKA R32

High Capacity Outdoor Units

Power Inverter Heat Pump (Three Phase)

Mr.SLIM™

Our high capacity Power Inverter outdoor units provide excellent system flexibility by connecting to 2, 3 or 4 Mr Slim indoor units.

Power Inverter technology allows high seasonal efficiency performance as well as extra-long pipe runs. These units provide efficient cooling or heating to large open areas such as retail units, gyms and halls.

R32

POWER INVERTER

Key Features & Benefits:

- Connectable to up to 4 cassette, wall mount, ducted or ceiling suspended units
- Exceptional application coverage with up to 100m pipe runs
- Maximum design flexibility due to 30m height difference between outdoor unit & indoor units
- Utilises lower GWP R32 refrigerant



Air Conditioning | **Product Information**

PUZ-ZM200/250YKA R32
High Capacity Outdoor Units
Power Inverter Heat Pump (Three Phase)



PUZ-ZM200/250YKA OUTDOOR UNITS		PUZ-ZM200YKA	PUZ-ZM250YKA
Capacity (kW)	Heating (nominal)	22.4	27.0
	Cooling (nominal)	19.0	22.0
SCOP (nsh) / SEER (nsc) (BS EN14825)*1		4.50 (177.1%) / 7.49 (296.4%)	4.47 (175.7%) / 7.43 (294.3%)
SOUND PRESSURE LEVEL (dBA)	Heating/Cooling	62 / 59	62 / 59
WEIGHT (kg)		137	138
DIMENSIONS (mm)	Width x Depth x Height	1050 x 330+40 x 1338	1050 x 330+40 x 1338
PIPE SIZE mm (in)	Gas	28.58 (1 1/8")	28.58 (1 1/8")
	Liquid	9.52 (3/8")	12.7 (1/2")
ELECTRICAL SUPPLY		380-415v, 50Hz	380-415v, 50Hz
PHASE		Three	Three
SYSTEM POWER INPUT (kW)	Heating/Cooling (nominal)	5.63 / 4.95	7.81 / 6.86
	Heating/Cooling (UK)	5.07 / 4.11	7.03 / 5.69
STARTING CURRENT (A)		5	5
SYSTEM RUNNING CURRENT (A)	Heating/Cooling [MAX]	9.57 / 8.58 [22.5]	13.3 / 11.6 [22.5]
FUSE RATING (BS88) - HRC (A)		25	25
MAINS CABLE No. CORES		5	5
MAX PIPE LENGTH (m)		100	100
MAX HEIGHT DIFFERENCE (m)		30	30
CHARGE REFRIGERANT (kg) / CO_2 EQUIVALENT (t)	R32 (GWP 675) - 30m	6.3 / 4.25	6.8 / 4.59
MAX ADDITIONAL REFRIGERANT (kg) / CO_2 EQUIVALENT (t)	R32 (GWP 675)	2.9 / 1.96	2.4 / 1.62

*1 PUZ-ZM200YKA connected to 2 x PLA-ZM100EA, PUZ-ZM250YKA connected to 2 x PLA-ZM125EA

PUZ-ZM200/250YKA DIMENSIONS

UPPER VIEW

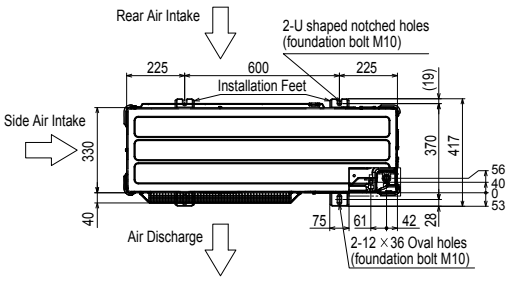

Model	① Refrigerant GAS pipe connection	② Refrigerant LIQUID pipe connection
PUZ-ZM200YKA	ø19.05 (3/4F)	ø9.52 (3/8F)
PUZ-ZM250YKA	ø19.05 (3/4F)	ø12.7 (1/2F)
PUHZ-ZRP200YKA.UK	ø19.05 (3/4F)	ø9.52 (3/8F)
PUHZ-ZRP250YKA.UK	ø19.05 (3/4F)	ø12.7 (1/2F)

※1···Indication of Terminal connection location.
※2···Refrigerant GAS pipe connection (BRAZING) O.Dø25.4.
※3···Indication of STOP VALVE connection location.

FRONT VIEW

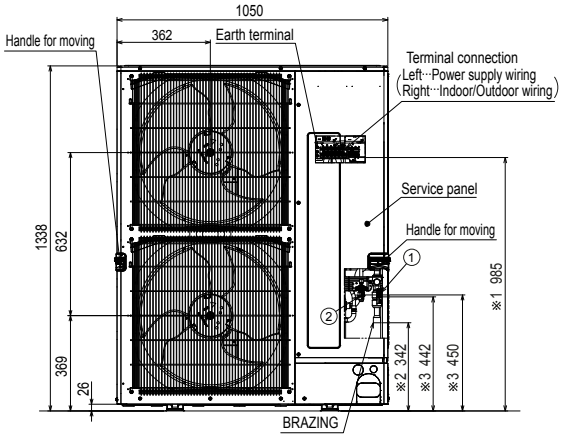

SIDE VIEW

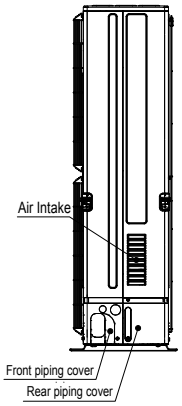

MITSUBISHI ELECTRIC
Changes for the Better

Telephone: **01707 282880**
email: **air.conditioning@meuk.mee.com**
les.mitsubishielectric.co.uk

@meuk_les
@green_gateway
Mitsubishi Electric Living Environmental Systems UK
Mitsubishi Electric Cooling and Heating UK
mitsubishielectricuk_les
Mitsubishi Electric Living Environmental Systems UK
BLOG thehub.mitsubishielectric.co.uk

UNITED KINGDOM Mitsubishi Electric Europe Living Environment Systems Division, Travellers Lane, Hatfield, Hertfordshire, AL10 8XB, England. Telephone: 01707 282880 Fax: 01707 278881
IRELAND Mitsubishi Electric Europe, Westgate Business Park, Ballymount, Dublin 24, Ireland. Telephone: (01) 419 8800 Fax: (01) 419 8890 International code: (003531)

Country of origin: United Kingdom - Japan - Thailand - Malaysia. ©Mitsubishi Electric Europe 2020. Mitsubishi and Mitsubishi Electric are trademarks of Mitsubishi Electric Europe B.V. The company reserves the right to make any variation in technical specification to the equipment described, or to withdraw or replace products without prior notification or public announcement. Mitsubishi Electric is constantly developing and improving its products. All descriptions, illustrations, drawings and specifications in this publication present only general particulars and shall not form part of any contract. All goods are supplied subject to the Company's General Conditions of Sale, a copy of which is available on request. Third-party product and brand names may be trademarks or registered trademarks of their respective owners.

Note: The fuse rating is for guidance only. Please refer to the relevant databook for detailed specification. It is the responsibility of a qualified electrician/electrical engineer to select the correct cable size and fuse rating based on current regulation and site specific conditions. Mitsubishi Electric's air conditioning equipment and heat pump systems contain a fluorinated greenhouse gas, R410A (GWP:2088), R32 (GWP:675), R407C (GWP:1774), R134a (GWP:1430), R513A (GWP:631), R454B (GWP:466), R1234ze (GWP:7) or R1234yf (GWP:4). *These GWP values are based on Regulation (EU) No 517/2014 from IPCC 4th edition. In case of Regulation (EU) No.626/2011 from IPCC 3rd edition, these are as follows. R410A (GWP:1975), R32 (GWP:550), R407C (GWP:1650) or R134a (GWP:1300).

Effective as of May 2020

Green Gateway greengateway.mitsubishielectric.co.uk

FRAMED

4. Manufacturer Product Data Sheets

4.32

Legrand Steel Surface Trunking

Source file: salamandre_mgr422c.pdf

SAMPLE

Salamandre® distribution trunking
lengths, lids and couplers

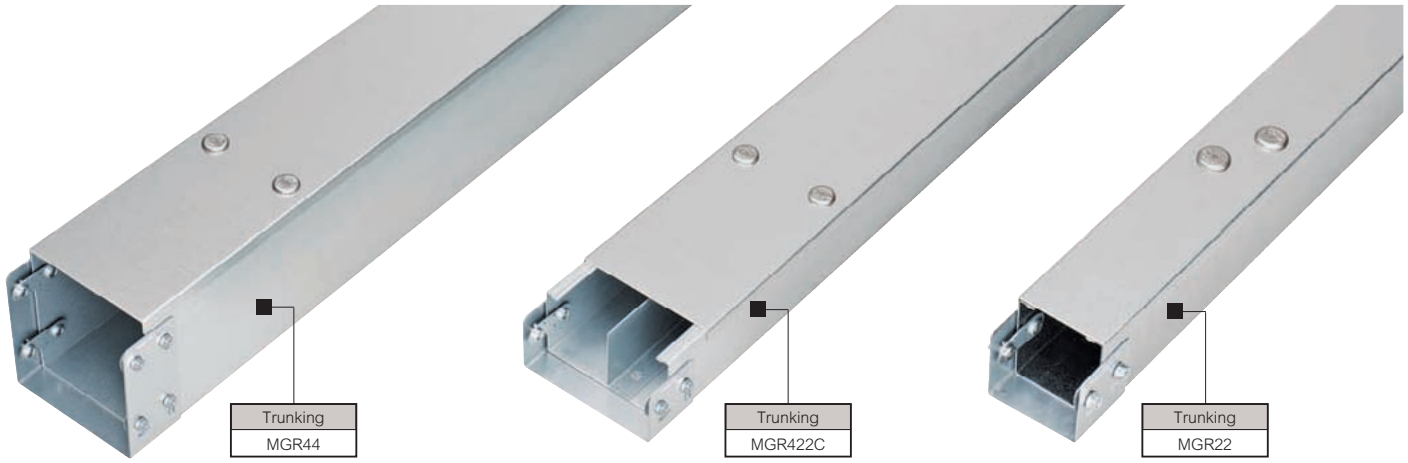

Selection chart (p. 8-9)
Order information (p. 10)
Standards and quality assessment (p. 20)
Dimensions and technical information (p. 21-30)

Trunking lengths – 3 m

A safety return edge steel surface trunking system with strength and rigidity
Manufactured to BS EN 50085-2-1
Each trunking length is supplied with coupler (fitted), lid and lid fixings
Supplied as standard with push-fit diecast turnbuckle fixings. For screwfix or tamperproof screwfix, replace MGR with MSR or MSTR. For more details (see order information p. 10)

Single compartment

Also available in multi-compartment options (see p. 10)

Pack	Cat. Nos.	Width (mm)	Depth (mm)
1	MGR22	50	50
1	MGR32	75	50
1	MGR33	75	75
1	MGR42	100	50
1	MGR43	100	75
1	MGR44	100	100
1	MGR62	150	50
1	MGR63	150	75
1	MGR64	150	100
1	MGR66	150	150
1	MGR93	225	75
1	MGR94	225	100
1	MGR96	225	150
1	MGR99	225	225
1	MGR123	300	75
1	MGR124	300	100
1	MGR126	300	150
1	MGR1212	300	300

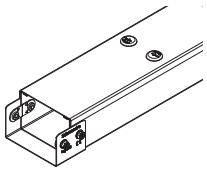

Spare lids

Spare turnbuckle lids

Diecast turnbuckles included
Lids 50 to 150 wide : 6 per 3 m lid
Lids 225 and 300 wide : 4 per 1·5 m lid

Pack	Cat. Nos.	
1	MGR2LID	50 mm wide x 3 m long
1	MGR3LID	75 mm wide x 3 m long
1	MGR4LID	100 mm wide x 3 m long
1	MGR6LID	150 mm wide x 3 m long
1	MGR9LID	225 mm wide x 1·5 m long
1	MGR12LID	300 mm wide x 1·5 m long

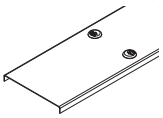

Spare screwfix and tamperproof screwfix lids

Screws and retaining clips not included (see p. 16)
Lids up to 150 wide : 6 per 3 m lid
Lids 225 and 300 wide : 4 per 1·5 m lid

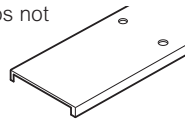

Replace MGR with MSR (screwfix) in the Cat. Nos. above

Accessories

Trunking couplers

Pack	Cat. Nos.	
1	MGR Z C	Supplied with coupler screws fitted and backed off

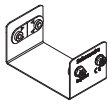

IP4X cover strap

Clips over coupler joint to provide IP4X
Used in conjunction with IP4X fittings, see p. 14 for details

Pack	Cat. Nos.	
1	MGIP2CS	50 mm cover strap
1	MGIP3CS	75 mm cover strap
1	MGIP4CS	100 mm cover strap
1	MGIP6CS	150 mm cover strap
1	MGIP9CS	225 mm cover strap
1	MGIP12CS	300 mm cover strap

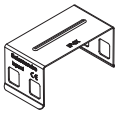

Key : Z = trunking size code
Replace Z with the relevant code (see p. 10)



MGR can be replaced by MSR or MSTR for screwfix lids or tamperproof screwfix lids
Also available in multi-compartment options

see p. 10

SAMPLE

4. Manufacturer Product Data Sheets

4.33

Mitsubishi Electric 600x600 Ceiling Cassette AC

Source file: SLZ-M_R32_Standard_Inverter_Product_Information_Sheet_2019-1.pdf

SAMPLE

Air Conditioning

Product Information

SLZ-M R32
600x600 4-Way Blow Ceiling Cassette System
Standard Inverter Heat Pump

Making a World of Difference

Mr.SLIM



The **SLZ-M** cassette unit provides the smart solution to comfortable and efficient air conditioning. It combines a stylish square design slimline grille with the latest energy-saving technologies and is designed to fit snugly to ceilings making it ideal in both offices and retail.

Key Features

- New Design - Fits into narrow ceiling spaces with height of only 245mm
- Optional 3D i-see sensor grille provides customised comfort by automatically monitoring room occupancy, position and body temperatures
- Horizontal Airflow - eliminating uncomfortable draughts and improving airflow control
- Highly energy efficient, utilising low GWP R32 refrigerant

SAMPLE

MITSUBISHI ELECTRIC

Cooling | Heating | Ventilation | Controls

R32

Air Conditioning

Product Information

SLZ-M R32
600x600 4-Way Blow Ceiling Cassette System
Standard Inverter Heat Pump

Making a World of Difference







SLZ-M-FA INDOOR UNITS		SLZ-M15FA	SLZ-M25FA	SLZ-M35FA	SLZ-M50FA	SLZ-M60FA
CAPACITY (kW)	Heating (nominal)	1.7 (0.9-3.1)	3.2 (1.3-4.2)	4.0 (1.0-5.0)	5.0 (1.3-5.5)	6.4 (1.6-7.3)
	Cooling (nominal)	1.5 (0.9-2.4)	2.5 (1.4-3.2)	3.5 (0.7-3.9)	4.6 (1.0-5.2)	5.7 (1.5-6.3)
	Heating (UK)	-	2.72 (1.11-3.57)	3.40 (0.85-4.25)	4.25 (1.11-4.68)	5.44 (1.36-6.21)
	Cooling (UK)	-	2.30 (1.29-2.94)	3.22 (0.64-3.59)	4.42 (0.92-4.79)	5.25 (1.38-5.80)
SHF (nominal)		;-	0.78	0.72	0.68	0.68
COP / EER (nominal)		-	3.61 / 3.80	3.71 / 3.20	3.20 / 3.40	3.00 / 3.40
SCOP / SEER (BS EN14825)		-	4.30 / 6.30	4.30 / 6.70	4.20 / 6.30	4.10 / 6.20
ErP ENERGY EFFICIENCY CLASS	Heating/Cooling	-	A+ / A++	A+ / A++	A+ / A++	A+ / A++
AIRFLOW (l/s)	Lo-Mi-Hi	100-108-117	108-125-142	108-133-158	117-150-192	125-192-217
PIPE SIZE mm (in)	Gas/Liquid	9.52 (3/8") / 6.35 (1/4")	9.52 (3/8") / 6.35 (1/4")	9.52 (3/8") / 6.35 (1/4")	12.7 (1/2") / 6.35 (1/4")	15.88 (5/8") / 6.35 (1/4")
SOUND PRESSURE LEVEL (dBA)	Lo-Mi-Hi	24-26-28	24-26-28	25-28-31	25-30-34	27-34-39
SOUND POWER LEVEL (dBA)		45	45	48	51	56
DIMENSIONS (mm)	Width x Depth x Height (Grille)	570 (650) x 570 (650) x 245 (10)	570 (650) x 570 (650) x 245 (10)	570 (650) x 570 (650) x 245 (10)	570 (650) x 570 (650) x 245 (10)	570 (650) x 570 (650) x 245 (10)
WEIGHT (kg)	Unit/Grille	15 / 3	15 / 3	15 / 3	15 / 3	15 / 3
ELECTRICAL SUPPLY		Fed by Outdoor Unit	Fed by Outdoor Unit	Fed by Outdoor Unit	Fed by Outdoor Unit	Fed by Outdoor Unit
FUSE RATING (BS88) - HRC (A)		6	6	6	6	6
INTERCONNECTING CABLE No. Cores		4	4	4	4	SLP-2FA
GRILLE REFERENCE		SLP-2FA	SLP-2FA	SLP-2FA	SLP-2FA	PAR-40MAA
WIRED REMOTE CONTROLLER REFERENCE		PAR-40MAA	Single	PAR-40MAA	PAR-40MAA	

Note: SLZ-M15FA only available with R32/R410A MXZ Multi-Split outdoor units.

SUZ-M-VA OUTDOOR UNITS		N/A MULTI-SPLIT ONLY	SUZ-M25VA	SUZ-M35VA	SUZ-M50VA	SUZ-M60VA
SOUND PRESSURE LEVEL (dBA)	Heating/Cooling	-	10	48 / 48	48 / 49	49 / 51
SOUND POWER LEVEL (dBA)	Cooling	-	3	59	64	65
WEIGHT (kg)		-	20	35	41	54
DIMENSIONS (mm)	Width x Depth x Height	-	12	800 x 285 x 550	800 x 285 x 714	840 x 330 x 880
ELECTRICAL SUPPLY		-	0.65 / 0.44	220-240v, 50Hz	220-240v, 50Hz	220-240v, 50Hz
PHASE				Single	Single	Single
SYSTEM POWER INPUT (kW)	Heating/Cooling (nominal)	-	0.91 / 0.61	1.07 / 1.09	1.56 / 1.35	2.13 / 1.67
	Heating/Cooling (UK)			0.91 / 0.94	1.33 / 1.16	1.81 / 1.44
STARTING CURRENT (A)				5.0	8.0	9.3
SYSTEM RUNNING CURRENT (A)	Heating/Cooling [MAX]			5.0 / 4.1 [8.5]	8.0 / 7.1 [13.5]	9.3 / 8.4 [14.9]
FUSE RATING (BS88) - HRC (A)				10	20	20
MAINS CABLE No. Cores				3	3	3
MAX PIPE LENGTH (m)				20	30	30
MAX HEIGHT DIFFERENCE (m)				12	30	30
CHARGE REFRIGERANT (kg) / CO_2 EQUIVALENT (t) R32 (GWP 675) - 7m				0.90 / 0.61	1.20 / 0.81	1.25 / 0.84
MAX ADDITIONAL REFRIGERANT (kg) / CO_2 EQUIVALENT (t) R32 (GWP 675)				1.16 / 0.78	1.66 / 1.12	1.71 / 1.15

PRODUCT DIMENSIONS

SLZ-M15/25/35/50/60FA

Upper View

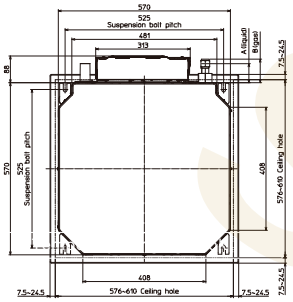

Side View

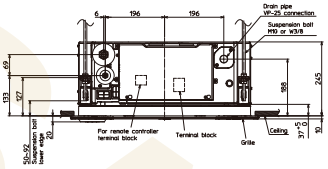

Front View

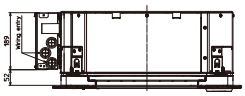

SAMPLE

MITSUBISHI ELECTRIC
Changes for the Better

Telephone: 01707 282880
email: air.conditioning@meuk.mee.com
web: airconditioning.mitsubishielectric.co.uk

UNITED KINGDOM Mitsubishi Electric Europe Living Environment Systems Division
Travellers Lane, Hatfield, Hertfordshire, AL10 8XB, England General Enquiries Telephone: 01707 282880 Fax: 01707 278881
IRELAND Mitsubishi Electric Europe Westgate Business Park, Ballymount, Dublin 24, Ireland
Telephone: Dublin (01) 419 8800 Fax: Dublin (01) 419 8890 International code: (003531)

Green Gateway
www.greengateway.mitsubishielectric.co.uk
Mitsubishi Electric UK's commitment to the environment

Follow us @meuk_les
Follow us @green_gateway
Mitsubishi Electric Living Environmental Systems UK
mitsubishielectric2
thehub.mitsubishielectric.co.uk

Effective as of January 2019

Country of origin: United Kingdom – Japan – Thailand – Malaysia. ©Mitsubishi Electric Europe 2019. Mitsubishi and Mitsubishi Electric are trademarks of Mitsubishi Electric Europe B.V. The company reserves the right to make any variation in technical specification to the equipment described, or to withdraw or replace products without prior notification or public announcement. Mitsubishi Electric is constantly developing and improving its products. All descriptions, illustrations, drawings and specifications in this publication present only general particulars and shall not form part of any contract. All goods are supplied subject to the Company's General Conditions of Sale, a copy of which is available on request. Third-party product and brand names may be trademarks or registered trademarks of their respective owners.

Note: The fuse rating is for guidance only. Please refer to the relevant databook for detailed specification. It is the responsibility of a qualified electrician/electrical engineer to select the correct cable size and fuse rating based on current regulation and site specific conditions. Mitsubishi Electric's air conditioning equipment and heat pump systems contain a fluorinated greenhouse gas, R410A (GWP:2088), R32 (GWP:675), R407C (GWP:1774) or R134a (GWP:1430). *These GWP values are based on Regulation (EU) No 517/2014 from IPCC 4th edition. In case of Regulation (EU) No.626/2011 from IPCC 3rd edition, these are as follows. R410A (GWP:1975), R32 (GWP: 550), R407C (GWP:1650) or R134a (GWP:1300).

4. Manufacturer Product Data Sheets

4.34

Systemair 300mm Axial Extract Fan

Source file: Systemair_AW_300_EC_sileo_Axial_fan.pdf

SAMPLE

AW 300 EC sileo Axial fan

Article Number: 35857

Variant : 230V 1~ 50/60Hz



Description

- 100% speed controllable
- electric connection via terminal box mounted on the motor
- inlet protection guard
- Integrated motor protection
- safe and maintenance free operation
- installation in any mounting position

Axial fans of the range AW EC sileo are driven by high efficient, energy saving EC-external rotor motors. The power electronics is integrated in the motor casing/terminal box. All motors are suitable to be used for 50/60Hz. The input voltage for single phase units can vary between 200 and 240V. Speed control by a 0-10V signal. The AW EC sileo range is equipped with a square wall plate...

Find more details in our online catalogue

Technical parameters

Nominal data		
Voltage (nominal)	230	V
Frequency	50; 60	Hz
Phase(s)	1~	
Input power	167	W
Input current	1.36	A
Impeller speed	2,245	rpm
Air flow	max 0.883	m³/s
Air flow at max. efficiency	0.4986	m³/s
Specific ratio	1,000000	
Temperature of transported air	max 60	°C
Max temperature of transported air, when speed controlled	60	°C
Sound data		
Sound pressure level at 1m	62	dB(A)
Protection/Classification		
Enclosure class, motor	IP54	
Insulation class	B	
Data according to ErP		
ErP ready	ErP 2018	
Measurement category	A	
Efficiency grade	54.5	ηactual
Efficiency, static	43.1	ηstatA
Target efficiency grade ErP2013	36	ηtarget2013
Target efficiency grade ErP2015	40	ηtarget2015
Dimensions and weights		
Weight	5	kg

Dimension

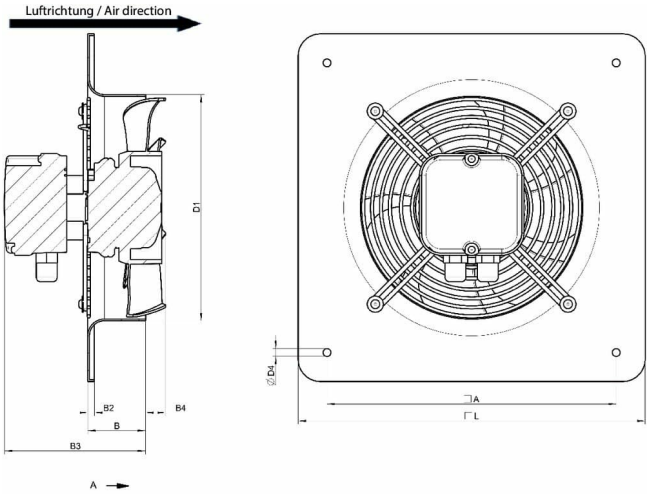

	□A	B	B2	B3	B4	ØD1	ØD4	□L
AW 300 EC sileo	380	80	11	157	11	327	9	430

SAMPLE

Others	
Color name, casing	Black
Motor type	EC

Wiring

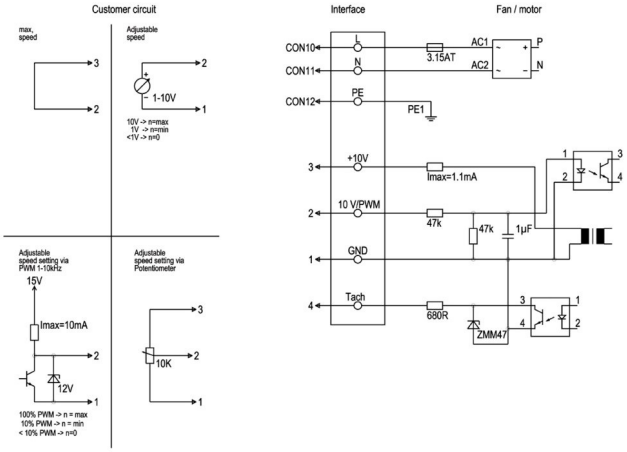

No.	Signal	Colour	Function / assignment
CON10	L	black	Power supply 230 VAC, 50-60 Hz, for voltage range refer to rating plate
CON11	N	blue	Neutral conductor
CON12	PE	green/yellow	Protective earth
1	GND	blue	GND - Connection for control interface
2	0- 10V PWM	yellow	Control input 0 - 10 V or PWM, electrically isolated
3	10V/ max 1.1mA	red	Voltage output 10V/ 1.1mA, electrically isolated, not short-circuit-proof.
4	Tach	white	Tach output: open collector, 1 pulse per revolution, electrically isolated

Performance curve

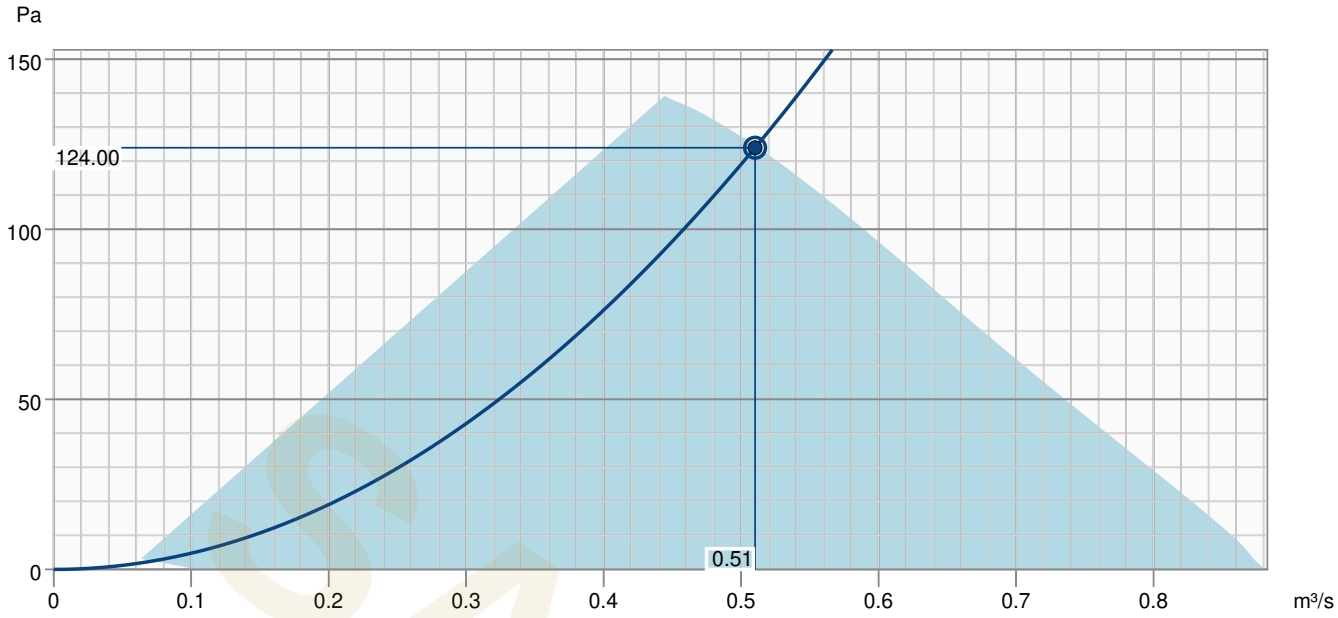

SAMPLE

Hydraulic data	
Required air flow	0.51 m³/s
Required static pressure	124 Pa
Working air flow	0.51 m³/s
Working static pressure	124 Pa
Air density	1.204 kg/m³
Power	166.7 W
Fan control - RPM	2061 rpm
Current	1.30 A
SFP	0.327 kW/m³/s
Control voltage	230.0 V
Supply voltage	230 V

Sound power level		63	125	250	500	1k	2k	4k	8k	Total
Inlet	dB(A)	51	59	59	62	63	63	59	53	69

Accessories

EC-Basic-CO2 and temperature (24808)
EC-Basic-T temperature (24805)
EC-Vent control board (3115)
MTP 10, 10K, Speed control (32731)
MTV-1/010 Controller 0..10V+ (30650)
S-5EC/FRQ (76738)
EC-Basic-H humidity (24807)
EC-Basic-U universal 0-10V (24806)
EC-Vent Room Unit (3018)
MTP 20, on/off, 3-step (310220)
REV-3POL/03-7,5kW R/Y (33978)

Documents

IMO_AW 300 EC SILEO_35857_DE,EN.PDF
MANUAL_AW__AR_EBM_EN_003-MIN.PDF
UKCA-declaration of conformity_AXC_001
installation variations_2_AR_AW.pdf

SAMPLE

4. Manufacturer Product Data Sheets

4.35

Systemair 6-Inch Wall Fan

Source file: Systemair_ES6W_Wall_Fan_Systemair.pdf

SAMPLE

ES6W Wall Fan Systemair

Article Number: 16300

Variant : 230V 1~ 50Hz



Description

The Systemair range of commercial fans are ideal for offices, restaurants and public houses to comply with building regulations on ventilation. The range includes 6", 9" and 12" models, all fully speed controllable, the 9" and 12" also being reversible for supply/extract applications. Fans are complete with thermo-activated shutters to prevent draughts and save on costs. Different coloured grilles are available in white, terracotta and brown - standard colour is pale grey. The units are manufactured using high ABS thermoplastics for strength and durability, aesthetics and easy cleaning. The panel model is designed for refurbishment projects as they will fit...

Find more details in our online catalogue

Technical parameters

Nominal data		
Voltage (nominal)	230	V
Frequency	50	Hz
Phase(s)	1~	
Input power	45	W
Maximum current	0.24	A
Air flow	max 0.077	m³/s
Sound data		
Sound pressure level at 3m (20m² Sabin)	40	dB(A)
Dimensions and weights		
Weight	0	kg
Others		
Motor type	AC	

Performances

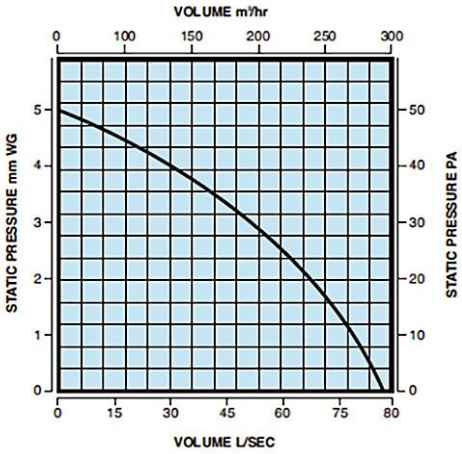

Dimension

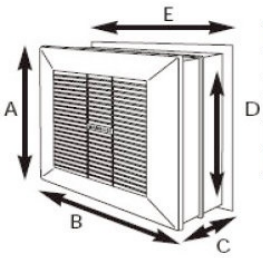

Product	A	B	C	D	E
ES6W	310	310	160-290	278	288
ES9W	390	390	160-290	361	366
ES12W	470	470	160-290	440	447

SAMPLE

Wiring

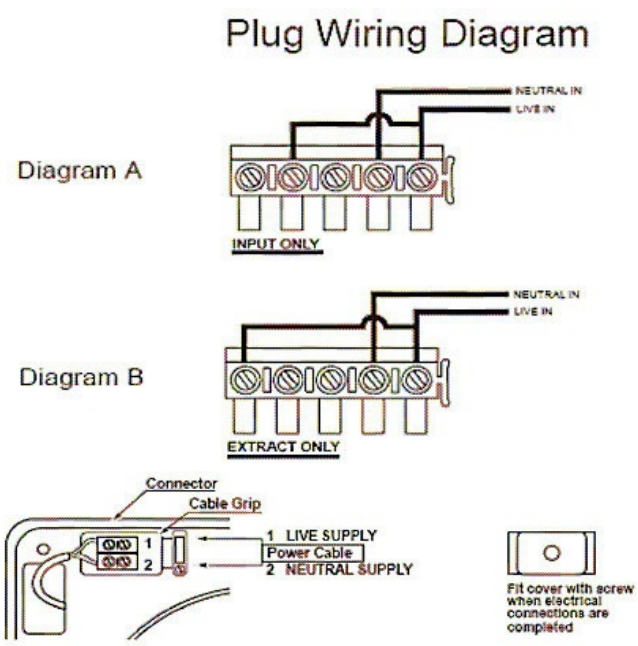

NOTE (Diagram A) The 6", 9" and 12" fans series can be wired via 3 core cable for intake only.

NOTE (Diagram B) The 6", 9" and 12" fans series can be wired via 3 core cable for extract only.

Documents

OM Commercial Wall Panel Fans.pdf

SAMPLE

4. Manufacturer Product Data Sheets

4.36

Systemair Silent Box Fan 125mm

Source file: Systemair_KVK_Silent_125_EC.pdf

SAMPLE

KVK Silent 125 EC

Article Number: 92168

Variant : 230V 1~ 50/60Hz



Description

- Low sound level, thick and high density insulation
- Compact design, easy installation
- Easy maintenance, service cover
- Air tight design
- High efficiency and low SFP in a real working point
- Potentiometer included, possible to speed control 0-100%
- Simple to install, mounting brackets included
- Integrated motor protection
- Aluzinc casing, C4 corrosion class

KVK Silent EC is a box fan with circular duct connections. The casing is insulated with thick and high density mineral wool insulation. The casing is manufactured from Aluzinc in corrosion class C4. A service cover with screw connection and hinges...

Find more details in our online catalogue

Technical parameters

Nominal data		
Voltage (nominal)	230	V
Frequency	50; 60	Hz
Phase(s)	1~	
Input power	75	W
Input current	0.633	A
Impeller speed	3,243	rpm
Air flow	max 0.121	m³/s
Temperature of transported air	max 55	°C
Max temperature of transported air, when speed controlled	55	°C
Sound data		
Sound pressure level at 3m (20m² Sabin)	46	dB(A)
Protection/Classification		
Enclosure class, motor	IP54	
Insulation class	B	
Data according to ErP		
Energy class, Basic unit	E	
Energy class, Local demand	B	
ErP ready	ErP 2018	
Dimensions and weights		
Duct dimension; Circular, inlet	125	mm
Duct dimension; Circular, outlet	125	mm
Weight	13.7	kg
Others		
Duct connection type	Circular	
Motor type	EC	

Dimension

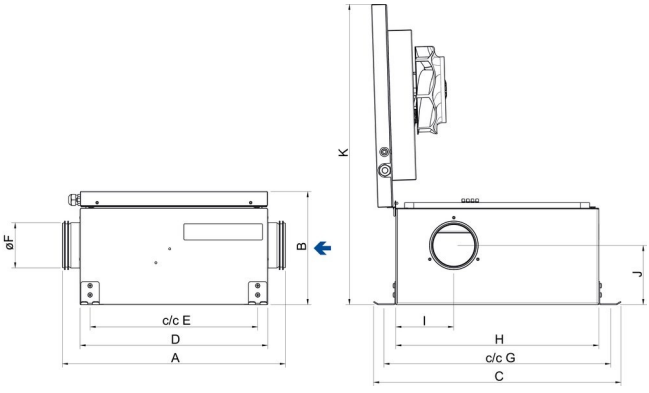

A	B	C	D	E	Ø F	G	H	I	J	K
482	245	535	405	363	123	490	443	125	128	650

Wiring

Internal potentiometer, default

230V 1~

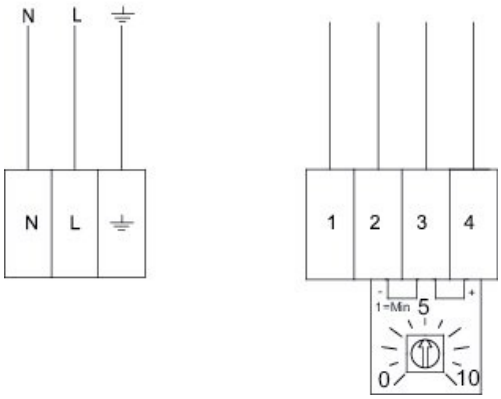

A	White
B	Blue
C	Yellow
D	Red

SAMPLE

Performance curve

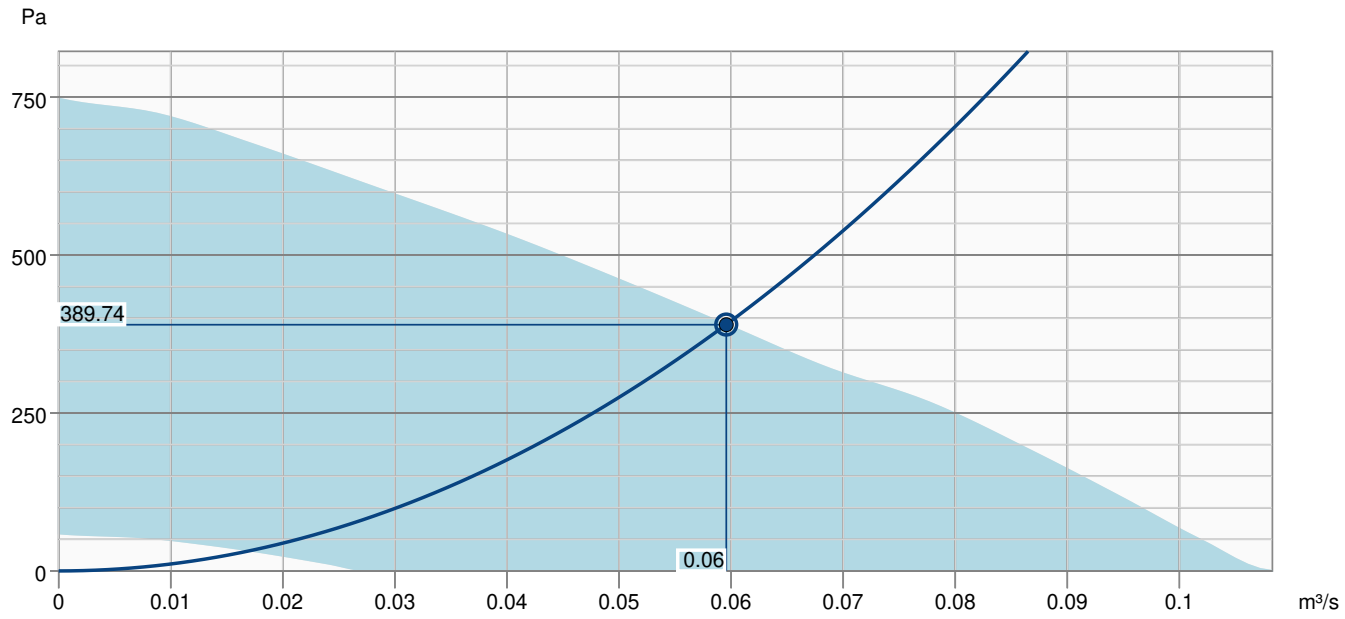

Hydraulic data	
Required air flow	0.06 m³/s
Required static pressure	390 Pa
Working air flow	0.06 m³/s
Working static pressure	390 Pa
Air density	1.204 kg/m³
Power	73.9 W
Fan control - RPM	3524 rpm
Current	0.60 A
SFP	1.241 kW/m³/s
Control voltage	10.0 V
Supply voltage	230 V

Sound power level		63	125	250	500	1k	2k	4k	8k	Total
Inlet	dB(A)	55	54	54	53	47	45	41	38	61
Outlet	dB(A)	59	61	65	69	68	65	58	51	74
Surrounding	dB(A)	25	36	37	43	37	38	38	30	47
Sound pressure level at 3m (20m² Sabine)	dB(A)	-	-	-	-	-	-	-	-	40
Sound pressure level at 3m free field	dB(A)	-	-	-	-	-	-	-	-	26

Accessories

CXE/AVC Modbus (37256)
EC-Basic-CO2 and temperature (24808)
EC-Basic-T temperature (24805)
EC-Selector (9908)
EC-Vent Room Unit (3018)
MTP 20, on/off, 3-step (310220)
REV-3POL/03-7,5kW R/Y (33978)
SG 125 Protection guard (5607)
CO2RT-R-D Transmitter (6993)
IGK-125 Wall Grid (1631)
RT 0-30 Room Thermostat (5151)
CB 125-0,6 230V/1 Duct heater (5289)
CB 125-1,8 230V/1 Duct heater (5377)
CBMF 125-1,2 230V/1 Duct heate (12242)
FFR 125 Filter cassette (1768)
FK 125 Fast clamp (1608)
LDC 125-300 Silencer (53722)
LDC 125-900 Silencer (5191)
THB 160 Hood w. cover pl. Red (2034)
THS 160 Hood w. cover pl. Red (2044)
VBC 125-2 Water heating batt (5457)
DMD-C Pressure controller (15793)
EC-Basic-H humidity (24807)
EC-Basic-U universal 0-10V (24806)
EC-Vent control board (3115)
MTP 10, 10K, Speed control (32731)
MTV-1/010 Controller 0..10V+ (30650)
S-5EC/FRQ (76738)
VKK-125 Back draft damper (1624)
HR1 Room Humidistat (215150)
Presence detector/IR24-P (6995)
VBC 125-3 Water heating batt (9839)
CB 125-1,2 230V/1 Duct heater (5290)
CBM 125-1,2 230V/1 Duct heater (5480)
CWK 125-3-2,5 Duct cooler,circ (30021)
FGR 125 Filter cassette (1804)
LDC 125-1200 Silencer (5997)
LDC 125-600 Silencer (5190)
RSK-125 Back draft damper (5598)
THB 160 Hood w.cover pl. black (1764)
THS 160 Hood w.cover pl. black (1839)
VBF 125 Water heating battery (1730)

SAMPLE

Documents

EC-fans_Operating_and_Maintenance_instr _206268_CE_multilingual.pdf

SAMPLE

4. Manufacturer Product Data Sheets

4.37

Systemair Silent Box Fan 200mm

Source file: Systemair_KVK_Silent_200_EC.pdf

SAMPLE

KVK Silent 200 EC

Article Number: 92170

Variant : 230V 1~ 50/60Hz



Description

- Low sound level, thick and high density insulation
- Compact design, easy installation
- Easy maintenance, service cover
- Air tight design
- High efficiency and low SFP in a real working point
- Potentiometer included, possible to speed control 0-100%
- Simple to install, mounting brackets included
- Integrated motor protection
- Aluzinc casing, C4 corrosion class

KVK Silent EC is a box fan with circular duct connections. The casing is insulated with thick and high density mineral wool insulation. The casing is manufactured from Aluzinc in corrosion class C4. A service cover with screw connection and hinges...

Find more details in our online catalogue

Technical parameters

Nominal data		
Voltage (nominal)	230	V
Frequency	50; 60	Hz
Phase(s)	1~	
Input power	120	W
Input current	0.929	A
Impeller speed	2,479	rpm
Air flow	max 0.259	m³/s
Temperature of transported air	max 60	°C
Max temperature of transported air, when speed controlled	60	°C
Sound data		
Sound pressure level at 3m (20m² Sabin)	42	dB(A)
Protection/Classification		
Enclosure class, motor	IP54	
Insulation class	B	
Data according to ErP		
Energy class, Basic unit	E	
Energy class, Local demand	B	
ErP ready	ErP 2018	
Dimensions and weights		
Duct dimension; Circular, inlet	200	mm
Duct dimension; Circular, outlet	200	mm
Weight	21	kg
Others		
Duct connection type	Circular	
Motor type	EC	

Dimension

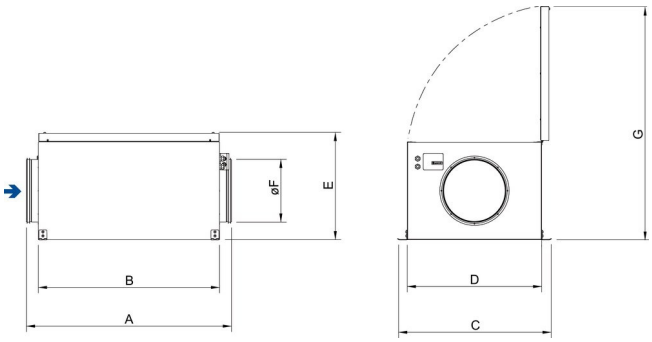

KVK SILENT	A	B	C	D	E	øF	G
200 AC/EC	682	604	596	500	352	200	810

Wiring

RD	**Red**
YE	Yellow
BU	Blue
WH	White
GN	Green
BN	Brown
BK	Black

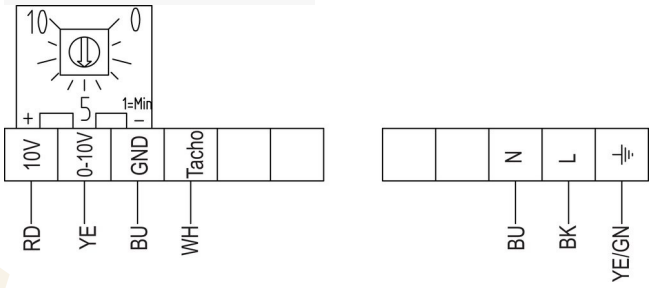

SAMPLE

Performance curve

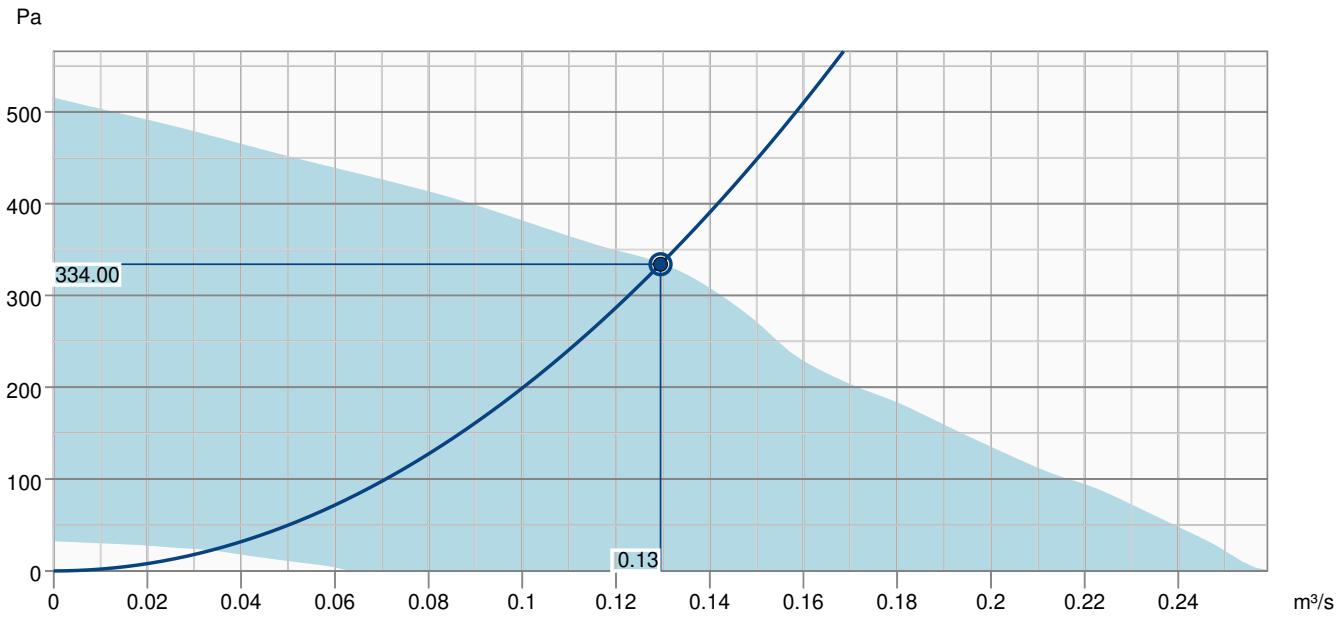

Hydraulic data	
Required air flow	0.13 m³/s
Required static pressure	334 Pa
Working air flow	0.13 m³/s
Working static pressure	334 Pa
Air density	1.204 kg/m³
Power	117.6 W
Fan control - RPM	2546 rpm
Current	0.90 A
SFP	0.908 kW/m³/s
Control voltage	10.0 V
Supply voltage	230 V

Sound power level		63	125	250	500	1k	2k	4k	8k	Total
Inlet	dB(A)	55	57	62	56	48	46	45	44	65
Outlet	dB(A)	52	54	63	61	58	60	53	45	67
Surrounding	dB(A)	29	33	46	42	40	29	27	29	49
Sound pressure level at 3m (20m² Sabine)	dB(A)	-	-	-	-	-	-	-	-	42
Sound pressure level at 3m free field	dB(A)	-	-	-	-	-	-	-	-	28

Accessories

CXE/AVC Modbus (37256)
EC-Basic-CO2 and temperature (24808)
EC-Basic-T temperature (24805)
EC-Selector (9908)
EC-Vent Room Unit (3018)
MTP 20, on/off, 3-step (310220)
REV-3POL/03-7,5kW R/Y (33978)
SG 200 Protection guard (5609)
CO2RT-R-D Transmitter (6993)
IGK-200 Wall Grid (1633)
RT 0-30 Room Thermostat (5151)
CB 200-2,1 230V/1 Duct heater (5384)
CB 200-3,0 400V/2 Duct heater (5294)
CBM 200-5,0 400V/2 Duct heater (5483)
CBMF 200-5,0 400V/2 Duct heate (12246)
FFR 200 Filter cassette (1773)
FK 200 Fast clamp (1611)
LDC 200-600 Silencer (5194)
RSK-200 Back draft damper (5602)
THS 200 Hood w.cover pl. black (134466)
VBC 200-3 Water heating batt (9841)
DMD-C Pressure controller (15793)
EC-Basic-H humidity (24807)
EC-Basic-U universal 0-10V (24806)
EC-Vent control board (3115)
MTP 10, 10K, Speed control (32731)
MTV-1/010 Controller 0..10V+ (30650)
S-5EC/FRQ (76738)
VKK-200 Back draft damper (1626)
HR1 Room Humidistat (215150)
Presence detector/IR24-P (6995)
VBF 200 Water heating battery (1732)
CB 200-3,0 230V/1 Duct heater (5370)
CB 200-5,0 400V/2 Duct heater (5371)
CBMF 200-3,0 230V/1 Duct heate (12245)
CWK 200-3-2,5 Duct cooler,circ (30023)
FGR 200 Filter cassette (1812)
LDC 200-300 Silencer (53369)
LDC 200-900 Silencer (5195)
THB 200 Hood w.cover pl. black (134465)
VBC 200-2 Water heating batt (5459)
VK-20 Louvre shutter (5639)

SAMPLE

Documents

KVK_SILENT_SLIM_OPERATING_MAINTENANCE_145899_CE_EN_A007.PDF

SAMPLE

4. Manufacturer Product Data Sheets

4.38

STAG IP65 Enclosed Rotary Isolator 4

Source file: Technical Data Sheet.pdf

SAMPLE

Technical Data

IS4P Enclosed Rotary Isolators

IP65 CE



- 4 Pole Range available from 20A to 150A
- IP65 Protection Rating (enclosure)
- EN 60947-3 Compliant
- 3 Sizes of Enclosure
- Multiple Gland Knockouts
- Lockable Rotary Handle
- Flame Retardant
- External Mounting Points
- Additional Earth Connection
- Interlocked Enclosure Lid

ORDERING INFORMATION

Part Number	Current I_e (AC21)	Rated Operating Voltage	Poles
IS4P20	20A	230 - 440V	4
IS4P20L	20A	230 - 440V	4
IS4P32	32A	230 - 440V	4
IS4P32L	32A	230 - 440V	4
IS4P40	40A	230 - 440V	4
IS4P63	63A	230 - 440V	4
IS4P80	80A	230 - 440V	4
IS4P100	100A	230 - 440V	4
IS4P125	125A	230 - 440V	4
IS4P150	150A	230 - 440V	4

DIMENSIONS (mm)

Part Number	Height	Width	Depth	Depth inc. Handle	Gland Knockouts
IS4P20	125	100	85	120	M20/25
IS4P20L	175	115	100	135	M20/25
IS4P32	125	100	85	120	M20/25
IS4P32L	175	115	100	135	M20/25
IS4P40	175	115	100	135	M20/25
IS4P63	175	115	100	135	M20/25
IS4P80	240	160	120	165	M20/25/32
IS4P100	240	160	120	165	M20/25/32
IS4P125	240	160	120	165	M20/25/32
IS4P150	240	160	120	165	M20/25/32

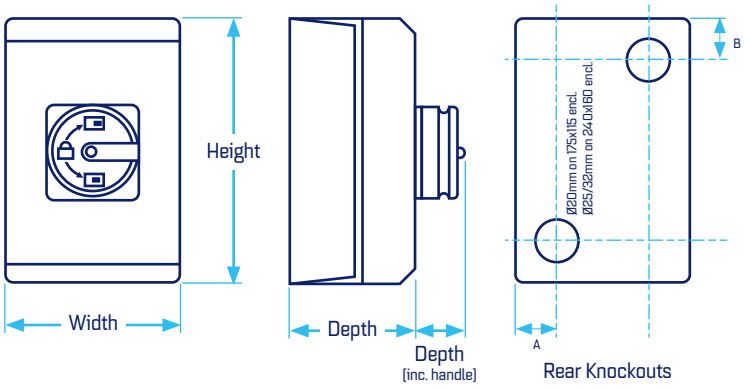

A: 27.5mm on 175x115mm enclosure
42mm on 240x160mm enclosure
B: 25mm on 175x115mm enclosure
42.0mm on 240x160mm enclosure

GENERAL INFORMATION

Enclosure Material	Polycarbonate
Lid Screw Material	Stainless Steel
Ingress Protection	IP65 Enclosure / IP20 Body
Interlocked Handle	In ON Position
Approvals	CE, SEMKO
Compliance	IEC EN 60947-3, RoHS

TECHNICAL SPECIFICATION

Part Number	IS4P20	IS4P20L	IS4P32	IS4P32L	IS4P40	IS4P63	IS4P80	IS4P100	IS4P125	IS4P150
Poles	4	4	4	4	4	4	4	4	4	4
Rated Operational Current I_e (AC21) (A)	20	20	32	32	40	63	80	100	125	150
Rated Power of 3Ph Motor at 415V (AC23A) (kW)	5.5	5.5	11	11	15	22	30	37	45	70
Rated Voltage (V)	415	415	415	415	415	415	415	415	415	415
Frequency (Hz)	50/60	50/60	50/60	50/60	50/60	50/60	50/60	50/60	50/60	50/60
Rated Insulation Voltage U_i (V)	690	690	690	690	690	690	690	690	690	690
Max. Cable Size (Solid/Stranded) (mm^2)	10	10	10	10	10	16	35	35	35	35
Rated Cond. Short Circuit Current (A)	20 I_e	20 I_e	20 I_e	20 I_e	20 I_e	20 I_e	20 I_e	20 I_e	20 I_e	20 I_e
Short Time Withstand Current 415V 1 sec. (A)	12 I_e	12 I_e	12 I_e	12 I_e	12 I_e	12 I_e	12 I_e	12 I_e	12 I_e	12 I_e
Rated Make/Break Capacity (A)	8 I_e	8 I_e	8 I_e	8 I_e	8 I_e	8 I_e	8 I_e	8 I_e	8 I_e	8 I_e
Protection Degree	IP65	IP65	IP65	IP65	IP65	IP65	IP65	IP65	IP65	IP65
Tightening Torque (Nm)	2	2	2	2	2	2	3	3	3	3
Mechanical Life (10^3)	10	10	10	10	10	10	10	10	10	10
Weight (kg)	0.52	0.75	0.52	0.75	0.75	0.75	1.34	1.34	1.34	1.34

For more information, email ***sales@stag-electrical.com***

Technical Data

SAC Auxiliary Contacts



- Auxiliary Contact for Stag Rotary Isolators
- EN 60947-3 Compliant
- 3 Sizes Covering Entire Isolator Range
- Fits on Left Hand Side
- 1 NO & 1NC Contacts

ORDERING INFORMATION

Part Number	Fits
SAC32-11	IS4P20, IS4P20L, IS4P32, IS4P32L
SAC63-11	IS4P40, IS4P63
SAC150-11	IS4P80, IS4P100, IS4P125, IS4P150

WIRING

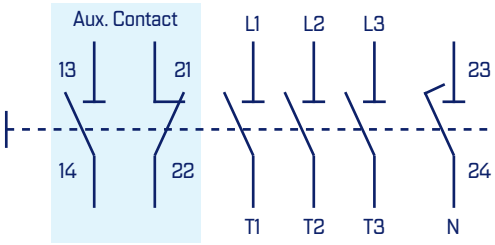

DIMENSIONS (mm)

SAC32-11

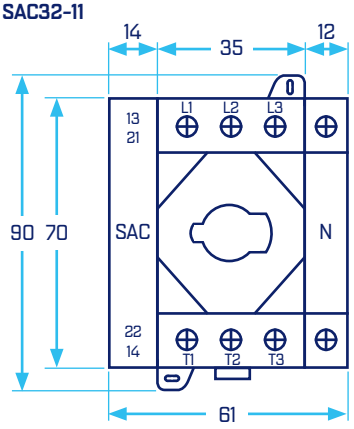

SAC63-11

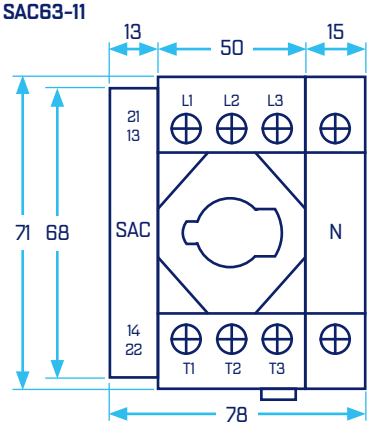

SAC150-11

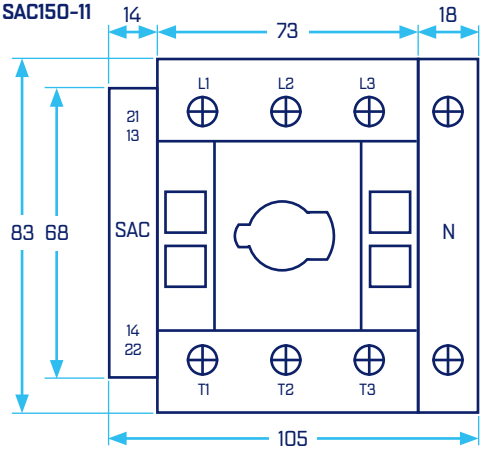

TECHNICAL SPECIFICATION

Part Number	SAC32-11	SAC63-11	SAC150-11
Contact Configuration	1 Normally Open (NO), 1 Normally Closed (NC)		
Rated Operational Current I_e (AC15) (A) 230V	6	6	6
Rated Operational Current I_e (DC13) (A) 125V	1.1	1.1	1.1
Rated Operational Current I_e (DC13) (A) 250V	0.55	0.55	0.55
Rated Insulation Voltage U_i (V)	500	500	500
Maximum Fuse (A) gG/gL	10	10	10
Max. Cable Size (Solid) (mm^2)	0.75 - 2.5	0.75 - 2.5	0.75 - 2.5
Max. Cable Size (Flexible with Ferrule) (mm^2)	0.5 - 1.5	0.5 - 1.5	0.5 - 1.5
Tightening Torque (Nm)	0.6	0.6	0.6
Control Circuit Reliability at 24V DC, 10mA (H_f)	< 10^{-5}, < 1 fault in 100,000 operations		
Compliance	IEC EN 60947-3, RoHS		
Approvals	CE		

SAMPLE

4. Manufacturer Product Data Sheets

4.39

Tass Cable Management 3-Compartment Cavity Floor

Source file: tfb3-80_RCD_specs.pdf

SAMPLE

SPECIFICATION SHEET

3 Compartment Cavity Floorbox

Model: TFB3/80 (RCD Compatible)

Tass Cable Management Ltd





Product Description

- Floor box manufactured from galvanised steel
- 25 & 20mm knockouts to accept flexible conduit
- Frame & lid moulded from high impact polycarbonate (RAL7031)
- Galvanised lid insert for strength
- Easy grip recessed lifting handle
- Clamp fixing for fast installation
- Large range of accessory plate, colour equivalent: RAL7035
- Designed specifically to accept STO291/RCD Twin RCD Protected Sockets
- Suitable for carpeted floors only with standard Frame & Lid
- Clean Earth Sockets available
- ABS Plastic Frame & Lid Load Test 550 KG
- Steel Frame & Lid Load Test 740 KG

Specifications

Floor Cut Out:	303mm x 221mm
Depth:	80mm
Plug Top Clearance:	28mm
Overall Frame & Lid:	313mm x 230mm
Frame Lid Recess:	6mm
Accessory Plates:	185mm x 89mm

Plug Top Clearance Diagram

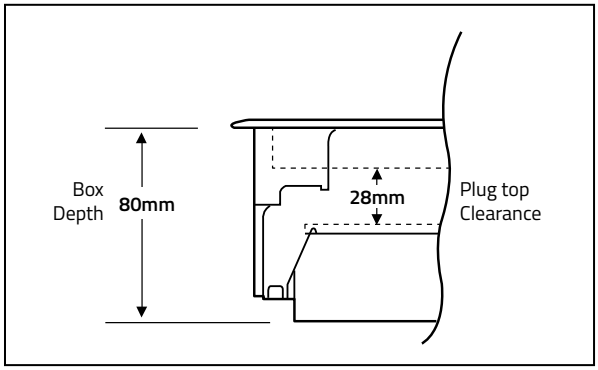

New Plastic RCD Protected Switched Sockets

The TFB3/80 is designed specifically with a deeper base (wiring) section to accommodate RCD protected sockets, this unit is now available with our new moulded plastic RCD flush mounted socket plate '**STO291/RCD/FM**', offering our customers a lower overall cost for a floorbox and an RCD plate set, *see illustrations to right for example plate combinations.*



SAMPLE

Contact: sales@floorbox.co.uk | **Visit:** www.floorbox.co.uk

Customer notice: Due to our policy of continuous improvement, Tass Cable Management Ltd reserve the right to change product specifications without notice. Tass Cable Management Ltd © | Floorbox.co.uk © | 2018 | All rights Reserved.

4. Manufacturer Product Data Sheets

4.40

Collingwood IP65 Colour Switchable Bulkhead

Source file: WL9530 Wall Lights (B&C).pdf

SAMPLE

BULKHEADS SPECIFICATION SHEET





Black eyelid
WL95BE



Black grille
WL95BG

WL95

IP65 18-27W Wattage and Colour Switchable Bulkhead, Black Housing

FEATURES

IK rating	IK10
IP rating	IP65
Colour flexibility	Colour switchable
Sensor	Microwave
Dimmable	No
Input	220-240V 50/60Hz
LED Lifetime	35,000h L70 B50
CRI	>80Ra
SDCM	6
Flicker Free	Yes
Emergency version available	Yes

INSTALLATION INFORMATION

Install Connector Type	4 ways, push-fit
Bathroom zone	2
Inrush Current	10A 50µs
Construction Material	ABS Housing PC Diffuser
Weight	850g
Maximum ambient temperature	-20° to 40°C
Electric Class (1, 2, 3)	2

PHOTOMETRICS @ 25°C

Product code	Finish	Feature I	Wattage	Colour	Beam angle	lm	lm/W	EM lm
WL9527SCSB	White	Standard	18-27W	3000K	115°	2100-3100	116-114	
WL9527SCSB	White	Standard	18-27W	4000K	115°	2150-3200	119-118	
WL9527SCSB	White	Standard	18-27W	6500K	115°	2150-3200	119-118	
WL9527ECSB	White	Emergency	18-27W	3000K	115°	2100-3100	116-114	120lm
WL9527ECSB	White	Emergency	18-27W	4000K	115°	2150-3200	119-118	120lm
WL9527ECSB	White	Emergency	18-27W	6500K	115°	2150-3200	119-118	120lm
WL9527MCSB	White	Microwave Sensor	15-25W	3000K	115°	1650-2800	110-112	
WL9527MCSB	White	Microwave Sensor	15-25W	4000K	115°	1750-3000	116-120	
WL9527MCSB	White	Microwave Sensor	15-25W	6500K	115°	1750-3000	116-120	
WL9527CCSB	White	Microwave and Emergency	15-25W	3000K	115°	1650-2800	110-112	120lm
WL9527CCSB	White	Microwave and Emergency	15-25W	4000K	115°	1750-3000	116-120	120lm
WL9527CCSB	White	Microwave and Emergency	15-25W	6500K	115°	1750-3000	116-120	120lm

WIRING INFORMATION

Cable / Flying Lead	Push-fit terminals, 1.5mm² max, loop-in/loop-out.
Type of Wiring Required	Parallel

ACCESSORIES

WL95BE	Black Eyelid Accessory	Sold Separately
WL95BG	Black Grille Accessory	Sold Separately

SAMPLE

COLLINGWOOD
LIGHTING

01604 495 151
collingwoodlighting.com

/collingwoodlighting
/collingwoodlighting
collingwoodled

GUARANTEE / WARRANTY

3 year extended warranty

FEATURES & BENEFITS

Wattage switchable - 18W & 27W

Colour switchable - 3000K, 4000K & 6500K, via a switch under the back cover

Slimline design

Multiple mounting options: BESA box, M20 conduit, cable glands

IP65 rated, making it perfect for using outdoors

Up to 119lm/W efficacy offers low running costs

Emergency versions available. Lumen output in EM mode = 120lm

Multiple black bezel options available

Easy access push fit screwless terminals

Light source energy efficiency:



Beam angle: 115°

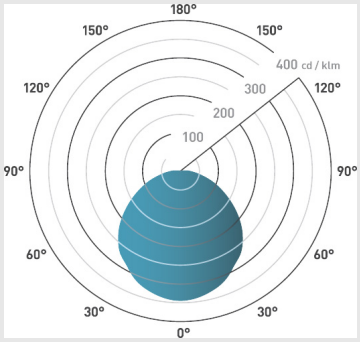

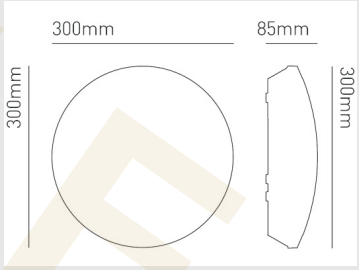

4. Manufacturer Product Data Sheets

4.41

Hager 2-Gang Double Pole Switched Socket

Source file: WMSS82.pdf

SAMPLE

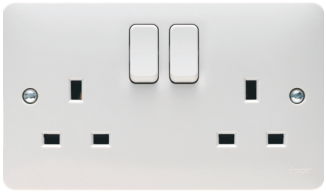

WMSS82

IP20

2 Gang Double Pole Switched Socket Dual Earth

Technical characteristics

Architecture	
Fixing mode	flush-mounting
Main electrical features	
Nominal voltage	250 V
Rated voltage	220…230 V AC
Rated current	13 A
Rated current	13 A
Dimensions	
Depth	29,5 mm
Height	86 mm
Width	146 mm
Capacity	
Number of modules	0
Cover, door	
Cover	Full cover plate
Materials	
Colour	white
Material	Urea-formaldehyde
Surface appearance	glossy
Type of surface treatment	untreated
Colour syntax: Colour	white
Installation, mounting	
Imprint	without imprint
Connection	
Type of connection	screw
Cable	
Wiring	with double earth connection
Scope of delivery	
Component	with 2 fixing screws M3.5 x 30 mm
Safety	
Protection index IP	IP20
Protection	Enhanced contact protection
Identification	
Designation syntax: Core designation/function	socket outlet

SAMPLE

4. Manufacturer Product Data Sheets

4.42

Hager 13A FCU Switched

Source file: WMSSU83.pdf

SAMPLE



WMSSU83

13A FCU Switched

Technical characteristics

Configuration	
Switch mode	2pole
Main electrical features	
Frequency	50/60 Hz
Rated current	13 A
Fuse	
Fuse	with ceramic fine fuse F 13A
Dimensions	
Depth	30,3 mm
Height	86 mm
Width	86 mm
Materials	
Colour	white
Material	Urea-formaldehyde
Installation, mounting	
Imprint	with clear terminal markings
Cable	
Wiring	with double earth connection
Scope of delivery	
Component	with 2 fixing screws M3.5 x 30 mm
Equipment	
Lighting	without lighting (cannot be illuminated)
Standards	
Standard	BS 1363-4
Safety	
Protection	to protect downstream loads

SAMPLE

5. Test & Commissioning Certificates

Ref	Description	Source File
5.01	Fire Alarm Commissioning Certificate	Fire Alarm Commissioning Certificate.pdf
5.02	Electrical Installation Temporary power (001)	Electrical Installation Temporary power (001).pdf
5.03	Chlorination Certificate	Chlorination Certificate.pdf
5.04	Electrical Installation Certificate	Electrical Certificate (EIC-01).pdf
5.05	Emergency Lighting Certificate	Emergency Lighting Test Certificate (EL-01).pdf
5.06	Zone and Address Print Out	Zone and Address Print Out.pdf

SAMPLE

5. Test & Commissioning Certificates

5.01

Fire Alarm Commissioning Certificate

Source file: Fire Alarm Commissioning Certificate.pdf

SAMPLE

FIRE DETECTION AND ALARM SYSTEM COMMISSIONING CERTIFICATE

Original Certificate:		Certificate Reference:	

DETAILS OF THE CLIENT

Issued in accordance with BS 5839-1:2017

Client:

Address:

DETAILS OF THE FIRE DETECTION AND ALARM SYSTEM

Address:

The system is:

New: ✓

An Addition:

An Alteration:

Extent of the system covered by the certificate: Advanced MXPro 5 addressable panel and all ancillaries

SYSTEM COMPLIANCE

Tick boxes as appropriate **L1** ✓ **L2** **L3** **Other:**

System Grade: A **System Category:** **LD1** **LD2** **LD3** **PD1** **PD2** **Other:**

COMMISSIONING

See Note 1 A tick in the box indicates the inspection or test that has been performed and the results are satisfactory. N/A indicates an inspection or test is Not Appropriate. Cross indicates test was not possible .

Test Buttons checked	✓	**Simulated smoke or aerosol test**	✓	**Dedicated circuit(s) provided**	✓	**Sound level test**	✓
All alarm warning devices operate	✓	**Heat test**	✓	**Protective device labelled**	✓	**Manual call point test**	✓
Silencing system checked	✓	**Bedroom sound level (Clause 13.2)**	X	**Audible and visual indication of mains failure**	✓	**All equipment operates correctly**	✓

SYSTEM EXAMINATION AND RECOMMENDATIONS

See Note 1

As-fitted drawings	✓	**The need to avoid contamination by paint**	✓	**Action to be taken in the event of a fire alarm signal**	✓
The system has been inspected and tested in accordance with the recommendations of Clause 39.2c BS 5839-1:2017	✓			**Installation work is, as far as can reasonably be ascertained, of an acceptable standard.**	✓
I/We have not identified any obvious potential for an unacceptable rate of false alarms. Section 3 BS 5839-1:2017	✓			**Documentation described in Clause 40 of BS5839-1:2017 has been provided to user.**	✓

The following work should be completed before/after the system becomes operational. Install one sounder in first floor kitchen and digital booth

The following outputs and relays have been tested as fully operational on the system Ground floor fire curtain

The system performs as required by the specification prepared by:

A copy of which I/We have been given.

✓ **Before the system becomes operational, it should be soak tested in accordance with Clause 35.2.6 of BS 5839-1:2017 for a period of:** 7 days **Not less than 1 week.**

CERTIFICATE OF COMMISSIONING

I/We being the person(s) responsible (as indicated by my/our signature(s) below), for the commissioning of the fire alarm system, particulars of which are set in this document, CERTIFY that the installation for which I/we have commissioned complies to the best of my/our knowledge and belief with the recommendation of BS 5839-1:2017

Except for the variations, if any, stated below: **Grade:** A **Category:** L1 **Part:** 1

No zone chart at time of installation. No as wired diagrams.

The extent of the liability of the signatory(s), is limited to the work and/or system described above as the subject of this certificate. For the COMMISSIONING of the system only.

Signature: NAME **Date:** 29 07 2022 **Name:**

PARTICULARS OF THE ORGANISATION COMMISSIONING THE SYSTEM

Organisation:

Note 1. The electrical safety aspects of the fire detection and alarm system must also be certified (by the installing contractor) in accordance with BS 7671.

Please see the 'Notes for the Recipient' on the reverse of this page.

FIRE DETECTION AND ALARM SYSTEM COMMISSIONING CERTIFICATE

DETAILS OF INSTALLING CONTRACTOR

Name:

Address:

RELATED REFERENCE DOCUMENTS

Design specification reference number	X	**Date issued**	
Design drawing reference number	FA-FF-01-A	**Date issued**	25 08 2021
As fitted Drawing No	FA-FF-01	**Electrical Installation Certificate No**	X

SCHEDULE OF EQUIPMENT TESTED

Reference	Description	Location	Operational	Comments
Fire Alarm Panel	Advanced MXPro 5 1 loop	Ground Floor Entrance	Yes	Qty 1
Battery Back-up	Yuasa 12v7.0Ah	As per asset list	Yes	Qty 2
Heat Detector	Apollo XP95	As per asset list	Yes	Qty 19
Smoke Detector	Apollo XP95	As per asset list	Yes	Qty 25
Manual Call Point	Apollo XP95	As per asset list	Yes	Qty 8
Input/Output	Apollo XP95	As per asset list	Yes	Qty 6 Both ground floor fire curtains working at time. All I/O's triggered on fire alarm signal
Sounder/VADS	Apollo XP95	As per asset list	Yes	Qty 28

SAMPLE

FIRE DETECTION AND ALARM SYSTEM COMMISSIONING CERTIFICATE

NOTES FOR THE RECIPIENT

THIS CERTIFICATE IS A VALUABLE DOCUMENT AND SHOULD BE RETAINED FOR FUTURE REFERENCE

This certificate has been issued to confirm that the fire detection and alarm system to which it relates has been commissioned in accordance with the recommendation given in BS5839-1:2017 Fire Detection and Fire Alarm Systems for buildings - Part 1 code of practice or system design, installation, commissioning and maintenance. This certificate consists of 3 pages . It should be read in conjunction with other related documents and all should be be passed to the user or purchaser of the system. It does not certify the electrical safety of the system which should be certified on a a separate document (fire detection and alarm installation certificate).

You should have received the certificate marked 'Original' and the organisation responsible for the installation of the fire detection and alarm system should have retained the the certificate marked "Duplicate".

This certificate is a valuable document and should be retained for future reference as you may subsequently rely on this certificate as evidence of compliance with legislation. If you were the person ordering the work but not the user of the system you should pass this certificate or a full copy of it including these notes and all the related reference documents, immediately to the user. The 'Original' certificate should be retained in a safe place and be shown to persons responsible for commissioning, accepting, servicing, modifying or using the fire detection system.

Commissioning

A tick in the box indicates that the inspection or test has been performed and results are satisfactory. Where a particular inspection or test is not appropriate for the particular system installed, N/A should be inserted in the box. The details of the sound level should be given in the relevant section.

Documentation

The installing contractor should have issued you, the recipient, with a copy of the user guide, (normally contained with the fire panel) and an installation certificate. This information would normally contain "what to do in case of an alarm" or "dealing with false alarms" for the user.

A logbook in which all events, including fire alarm signals, faults signals, system tests and maintenance that can be recorded, should exist on site.

Annex G, BS5839-1:2017

Service and Maintenance

It is essential that the system is subject to periodic inspection and servicing so that faults are identified, preventive measures can be taken to ensure the continued reliability of the system and false alarm problems are identified and suitably addressed. Periodic inspection and servicing needs to be carried out by a competent person with specialist knowledge of fire alarms including knowledge of the causes of false alarms, sufficient information regarding the system and adequate access to spares.

User's responsibilities (premises management)

The user needs to appoint a single, named member of the premises management to supervise all matters pertaining to fire detection and fire the alarm system. The role of this person is to ensure that the system is tested and maintained in accordance with the recommendation of BS5839 , that appropriate records are kept and relevant occupants in the protected premises are aware of their role and responsibilities in connection with the fire detection and fire alarm system. This person also needs to ensure that necessary steps are taken to avoid situations that are detrimental to the standard of protection afforded by the system.

This document is fully printed and no alteration by hand is acceptable.

© 2020

SAMPLE

5. Test & Commissioning Certificates

5.02

Electrical Installation Temporary power (001)

Source file: Electrical Installation Temporary power (001).pdf

SAMPLE

INSTALLER LOGO

ELECTRICAL INSTALLATION CERTIFICATE

Requirements For Electrical Installations - BS 7671 IET Wiring Regulations

Certificate Reference: 001

1 DETAILS OF THE CLIENT

Client Address: CLIENT

ADDRESS

2 DETAILS OF THE INSTALLATION

Installation Address: ADDRESS

Extent of the installation covered by this certificate: Temporary Powerfor welfare

The installation is: New installation ✔ | Addition to an existing installation N/A | Alteration to an existing installation N/A

3 DESIGN

I/We being the person(s) responsible for the design of the electrical installation (as indicated by my/our signatures below), particulars of which are described above, having exercised reasonable skill and care when carrying out the design, hereby CERTIFY that the design work for which I/we have been responsible is to the best of my/our knowledge and belief in accordance with BS 7671:2018, amended to 2020 except for the departures, if any, detailed as follows.

Details of departures from BS 7671 (Regulations 120.3, 133.5): None

Details of permitted exceptions (Regulations 411.3.3): Risk assessment attached N/A

None

The extent of liability of the signatory/signatories is limited to the work described above as the subject of this certificate.

For the DESIGN of the installation:

Name: NAME | Position: Director | Signature: | Date: 29/04/2022

Where there is divided responsibility for the design:

Name: NAME | Position: Director | Signature: | Date: 29/04/2022

4 CONSTRUCTION

I/We being the person(s) responsible for the construction of the electrical installation (as indicated by my/our signatures below), particulars of which are described above, having exercised reasonable skill and care when carrying out the construction, hereby CERTIFY that the construction work for which I/we have been responsible is to the best of my/our knowledge and belief in accordance with BS 7671:2018, amended to 2020 except for the departures, if any, detailed as follows.

Details of departures from BS 7671 (Regulations 120.3, 133.5): None

The extent of liability of the signatory/signatories is limited to the work described above as the subject of this certificate.

For the CONSTRUCTION of the installation:

Name: NAME | Position: Electrician | Signature: | Date: 29/04/2022

5 INSPECTION AND TESTING

I/We being the person(s) responsible for the inspection and testing of the electrical installation (as indicated by my/our signatures below), particulars of which are described above, having exercised reasonable skill and care when carrying out the inspection and testing, hereby CERTIFY that the inspection and testing work for which I/we have been responsible is to the best of my/our knowledge and belief in accordance with BS 7671:2018, amended to 2020 except for the departures, if any, detailed as follows.

Details of departures from BS 7671 (Regulations 120.3, 133.5): None

The extent of liability of the signatory/signatories is limited to the work described above as the subject of this certificate.

For the INSPECTION AND TESTING of the installation:

Name: NAME | Position: Electrician | Signature: | Date: 29/04/2022

6 DESIGN, CONSTRUCTION, INSPECTION AND TESTING

I/We being the person(s) responsible for the design, construction, inspection and testing of the electrical installation (as indicated by my/our signatures below), particulars of which are described above, having exercised reasonable skill and care when carrying out the design, construction, inspection and testing, hereby CERTIFY that the design work for which I/we have been responsible is to the best of my/our knowledge and belief in accordance with BS 7671:2018, amended to 2020 except for the departures, if any, detailed as follows.

Details of departures from BS 7671 (Regulations 120.3, 133.5): None

The extent of liability of the signatory/signatories is limited to the work described above as the subject of this certificate.

For the DESIGN, the CONSTRUCTION, and the INSPECTION AND TESTING of the installation:

Name: NAME | Position: Electrician | Signature: | Date: 29/04/2022

7 NEXT INSPECTION

I/We the designer(s), RECOMMEND that this installation is further inspected and tested after an interval of not more than: 6 Months

8 DETAILS OF THE ELECTRICAL CONTRACTOR

Design (1)

Trading Title: INSTALLER

Address: ADDRESS / ADDRESS / ADDRESS

Postcode: ADDRESS

Registration Number (if applicable): ECA -

Telephone Number: CONTACT

Design (2)

Trading Title: Same as Above

Address:

Postcode:

Registration Number (if applicable):

Telephone Number:

Construction

Trading Title: Same as Above

Address:

Postcode:

Registration Number (if applicable):

Telephone Number:

Inspection and Testing

Trading Title: Same as Above

Address:

Postcode:

Registration Number (if applicable):

Telephone Number:

9 SUPPLY CHARACTERISTICS AND EARTHING ARRANGEMENTS

Earthing Arrangements

TN-S	N/A
TN-C-S	✔
TNC	N/A
TT	N/A
IT	N/A

Number and Type of Live Conductors

ac:	✔			dc:	N/A
1-phase (2 wire):	N/A	1-phase (3 wire):	✔	2 pole:	N/A
2-phase (3 wire):	N/A			3 pole:	N/A
3-phase (3 wire):	N/A	3-phase (4 wire):	N/A	Other:	N/A
Other:	N/A				

Confirmation of supply polarity:

Nature of Supply Parameters

Nominal voltage(s): U:	400 V Uo: 230 V
Nominal frequency, f:	50 Hz
Prospective fault current, Ipf:	LIM kA
External earth fault loop impedance, Ze:	LIM Ω
Number of supplies:	1

Supply Protective Device

BS(EN):	
Type:	
Rated current:	A
Short-circuit capacity:	kA

10 PARTICULARS OF INSTALLATION REFERRED TO IN THE CERTIFICATE

Means of Earthing

Distributor's facility: ✔

Installation earth electrode: N/A

Details of Installation Earth Electrode (where applicable)

Type: N/A

Resistance to Earth: N/A Ω

Location: N/A

Method of measurement: N/A

Maximum Demand (Load):

Protective measure(s) against electric shock: N/A

Main Switch / Switch-Fuse / Circuit-Breaker / RCD

Type BS(EN): 60947-3 Isolator

Number of poles: 4

Current rating: 125 A

Fuse/device rating or setting: A

Voltage rating: 400 V

Supply conductors material: Copper

Supply conductors csa: 35 mm²

If RCD main switch:

Rated residual operating current (IΔn): N/A mA

Rated time delay: N/A ms

Measured operating time (at IΔn): N/A ms

Earthing and Protective Bonding Conductors

Earthing conductor

Conductor material: Copper

csa: 25 mm²

Connection/ continuity verified: ✔

Main protective bonding conductors

Conductor material: Copper

csa: N/A mm²

Connection/ continuity verified:

Bonding of extraneous-conductive parts

To water installation pipes: N/A

To gas installation pipes: N/A

To oil installation pipes: N/A

To lightning protection: N/A

To structural steel: N/A

To other service(s): N/A

11 COMMENTS ON EXISTING INSTALLATION

12 INSPECTION SCHEDULE

Item No	Description	Outcome
1.0	EXTERNAL CONDITION OF INTAKE EQUIPMENT (VISUAL INSPECTION ONLY)	
1.1	Service cable	✔
1.2	Service head	✔
1.3	Earthing arrangement	✔
1.4	Meter tails	✔
1.5	Metering equipment	✔
1.6	Isolator (where present)	✔
2.0	PARALLEL OR SWITCHED ALTERNATIVE SOURCES OF SUPPLY	
2.1	Presence of adequate arrangements where generator to operate as a switched alternative (551.6):	
2.1.1	Dedicated earthing arrangement independent of that of the public supply (551.4.3.2.1)	N/A
2.2	Presence of adequate arrangements where generator to operate in parallel with the public supply system (551.7):	
2.2.1	Correct connection of generator in parallel (551.7.2)	N/A
2.2.2	Compatibility of characteristics of means of generation (551.7.3)	N/A
2.2.3	Means to provide automatic disconnection of generator in the event of loss of public supply system or voltage or frequency deviation beyond declared values (551.7.4)	N/A
2.2.4	Means to prevent connection of generator in the event of loss of public supply system or voltage or frequency deviation beyond declared values (551.7.5)	N/A
2.2.5	Means to isolate generator from the public supply system (551.7.6)	N/A
3.0	AUTOMATIC DISCONNECTION OF SUPPLY	
3.1	Presence and adequacy of protective earthing/bonding arrangements (411.3; Chapter 54):	
3.1.1	Distributor's earthing arrangement (542.1.2.1; 542.1.2.2), or installation earth electrode arrangement (542.1.2.3)	✔
3.1.2	Earthing conductor and connections (Section 526; 542.3; 542.3.2; 543.1.1)	✔
3.1.3	Main protective bonding conductors and connections (Section 526; 544.1; 544.1.2)	✔
3.1.4	Earthing/bonding labels at all appropriate locations (514.13)	✔
3.2	Accessibility of:	
3.2.1	Earthing conductor connections	✔
3.2.2	All protective bonding connections (543.3.2)	✔
3.3	FELV – requirements satisfied (411.7; 411.7.1)	✔
4.0	BASIC AND FAULT PROTECTION (where used, confirmation that the requirements are satisfied)	
4.1	SELV (Section 414)	✔
4.2	PELV (Section 414)	N/A
4.3	Double insulation (Section 412)	✔
4.4	Reinforced insulation (Section 412)	✔
5.0	BASIC PROTECTION	
5.1	Insulation of live parts (416.1)	✔
5.2	Barriers or enclosures (416.2; 416.2.1)	✔
5.3	Obstacles (Section 417; 417.2.1; 417.2.2)	✔
5.4	Placing out of reach (Section 417; 417.3)	✔
6.0	FAULT PROTECTION	
6.1	Non-conducting location (418.1)	✔
6.2	Earth-free local equipotential bonding (418.2)	✔
6.3	Electrical separation (Section 413; 418.3)	✔

SAMPLE

13 INSPECTION SCHEDULE (CONTINUED)

Item No	Description	Outcome
7.0	ADDITIONAL PROTECTION	
7.1	RCDs not exceeding 30 mA as specified (415.1)	✔
7.2	Supplementary bonding (Section 415; 415.2)	N/A
8.0	DISTRIBUTION EQUIPMENT	
8.1	Security of fixing (134.1.1)	✔
8.2	Insulation of live parts not damaged during erection (416.1)	✔
8.3	Adequacy/security of barriers (416.2)	✔
8.4	Suitability of enclosures for IP and fire ratings (416.2; 421.1.6; 421.1.201; 526.5)	✔
8.5	Enclosures not damaged during installation (134.1.1)	✔
8.6	Presence and effectiveness of obstacles (417.2)	✔
8.7	Components are suitable according to manufacturers assembly instructions or literature (536.4.203)	✔
8.8	Presence of main switch(es), linked where required (462.1.201)	✔
8.9	Operation of main switch(es) (functional check) (643.10)	✔
8.10	Manual operation of circuit-breakers and RCDs to prove functionality (643.10)	✔
8.11	Confirmation that integral test button/switch causes RCD(s) to trip when operated (functional check) (643.10)	✔
8.12	RCD(s) provided for fault protection, where specified (411.4.204; 411.5.2; 531.2)	✔
8.13	RCD(s) provided for additional protection, where specified (415.1)	✔
8.14	Confirmation overvoltage protection (SPDs) provided where specified (534.4.1.1)	N/A
8.15	Presence of RCD six-monthly test notice at or near the origin (514.12.2)	✔
8.16	Presence of diagrams, charts or schedules at or near each distribution board, where required (514.9.1)	✔
8.17	Presence of non-standard (mixed) cable colour warning notice at or near the appropriate distribution board, where required (514.14)	✔
8.18	Presence of alternative supply warning notice at or near (514.15):	
8.18.1	The origin	N/A
8.18.2	The meter position, if remote from origin	N/A
8.18.3	The distribution board to which the alternative/additional sources are connected	✔
8.18.4	All points of isolation of ALL sources of supply	✔
8.19	Presence of next inspection recommendation label (514.12.1)	✔
8.20	Presence of other required labelling (Section 514)	✔
8.21	Selection of protective device(s) and base(s); correct type and rating (411.3.2; 411.4, .5, .6; Sections 432, 433, 434)	✔
8.22	Single-pole protective devices in line conductors only (132.14.1; 530.3.3; 643.6)	✔
8.23	Protection against mechanical damage where cables enter equipment (522.8.1; 522.8.5; 522.8.11)	✔
8.24	Protection against electromagnetic effects where cables enter ferromagnetic enclosures (521.5.1)	✔
8.25	Confirmation that ALL conductor connections, including connections to busbars, are correctly located in terminals and are tight and secure (526.1)	✔
9.0	CIRCUITS	
9.1	Identification of conductors (514.3.1)	✔
9.2	Cables correctly supported throughout (522.8.5; 521.10.202)	✔
9.3	Examination of cables for signs of mechanical damage during installation (522.6.1; 522.8.1; 522.8.3)	✔
9.4	Examination of insulation of live parts, not damaged during erection (522.6.1; 522.8.1)	✔
9.5	Non-sheathed cables protected by enclosure in conduit, ducting or trunking (521.10.1)	✔

SAMPLE

14 INSPECTION SCHEDULE (CONTINUED)

Item No	Description	Outcome
9.6	Suitability of containment systems (including flexible conduit) (Section 522)	✔
9.7	Correct temperature rating of cable insulation (522.1.1; Table 52.1)	✔
9.8	Adequacy of cables for current-carrying capacity with regard for the type and nature of installation (Section 523)	✔
9.9	Adequacy of protective devices: type and fault current rating for fault protection (434.5)	✔
9.10	Presence and adequacy of circuit protective conductors (411.3.1; 543.1)	✔
9.11	Coordination between conductors and overload protective devices (433.1; 533.2.1)	✔
9.12	Wiring systems and cable installation methods/practices with regard to the type and nature of installation and external influences (Section 522)	✔
9.13	Cables concealed under floors, above ceilings, in walls/partitions, adequately protected against damage (522.6.201, 522.6.202, 522.6.203, 522.6.204)	N/A
9.14	Provision of additional protection by RCDs having rated residual operating current (In) not exceeding 30mA:	
9.14.1	For all socket-outlets of rating (32A) or less, unless exempt (411.3.3)	✔
9.14.2	Supplies for mobile equipment not exceeding 32A rating for use outdoors (411.3.3)	✔
9.14.3	For cables concealed in walls at a depth of less than 50mm (522.6.202, .203)	N/A
9.14.4	For cables concealed in walls/partitions containing metal parts regardless of depth (522.6.202; .203)	N/A
9.14.5	Circuits supplying luminaires within domestic (household) premises (411.3.4)	N/A
9.15	Provision of fire barriers, sealing arrangements so as to minimize the spread of fire (Section 527)	✔
9.16	Band II cables segregated/separated from Band I cables (528.1)	N/A
9.17	Cables segregated/separated from non-electrical services (528.3)	✔
9.18	Termination of cables at enclosures (Section 526):	
9.18.1	Connections under no undue strain (522.8.5; 526.6)	✔
9.18.2	No basic insulation of a conductor visible outside enclosure (526.8)	✔
9.18.3	Connections of live conductors adequately enclosed (526.5)	✔
9.18.4	Adequately connected at point of entry to enclosure (glands, bushes etc.) (522.8.5)	✔
9.19	Suitability of circuit accessories for external influences (512.2)	✔
9.20	Circuit accessories not damaged during erection (134.1.1)	✔
9.21	Single-pole devices for switching or protection in line conductors only (132.14.1, 530.3.3; 643.6)	✔
9.22	Adequacy of connections, including cpcs, within accessories and at fixed and stationary equipment (Section 526)	✔
10.0	ISOLATION AND SWITCHING	
10.1	Isolators (462; 537.2):	
10.1.1	Presence and location of appropriate devices (Section 462; 537.2.7)	✔
10.1.2	Capable of being secured in the OFF position (537.2.4)	N/A
10.1.3	Correct operation verified (functional check) (643.10)	✔
10.1.4	The installation, circuit or part thereof that will be isolated clearly identified by location and/or durable marking (537.2.7)	✔
10.1.5	Warning notice posted in situation where live parts cannot be isolated by the operation of a single device (514.11.1; 537.1.2)	
10.2	Switching off for mechanical maintenance (Section 464; 537.3.2):	
10.2.1	Presence of appropriate devices (464.1; 537.3.2)	✔
10.2.2	Acceptable location - state if local or remote from equipment in question (537.3.2.4)	✔
10.2.3	Capable of being secured in the OFF position (464.2)	✔
10.2.4	Correct operation verified (functional check) (643.10)	✔
10.2.5	The circuit or part thereof to be disconnected clearly identified by location and/or durable marking (537.3.2.3; 537.3.2.4)	✔

15 INSPECTION SCHEDULE (CONTINUED)

Item No	Description	Outcome
10.3	Emergency switching/stopping (Section 465; 537.3.3; 537.4):	
10.3.1	Presence of appropriate devices (465.1; 537.3.3; 537.4)	✔
10.3.2	Readily accessible for operation where danger might occur (537.3.3.6)	✔
10.3.3	Correct operation verified (functional check) (643.10)	✔
10.3.4	The installation, circuit or part thereof to be disconnected clearly identified by location and/or durable marking (537.3.3.6)	✔
10.4	Functional switching (463.1; 537.3.1):	
10.4.1	Presence of appropriate devices (537.3.1.1; 537.3.1.2)	✔
10.4.2	Correct operation verified (functional check) (537.3.1.1; 537.3.1.2; 643.10)	✔
11.0	CURRENT-USING EQUIPMENT (PERMANENTLY CONNECTED)	
11.1	Suitability of equipment in terms of IP and fire ratings (416.2; 421.1; 421.1.201; 526.5)	✔
11.2	Enclosure not damaged/deteriorated during installation so as to impair safety (134.1.1)	✔
11.3	Suitability for the environment and external influences (512.2)	✔
11.4	Security of fixing (134.1.1)	✔
11.5	Cable entry holes in ceilings above luminaires, sized or sealed so as to restrict the spread of fire (527.2)	✔
11.6	Provision of undervoltage protection, where specified (Section 445)	N/A
11.7	Provision of overload protection, where specified (Section 433; 552.1)	✔
11.8	Recessed luminaires (downlighters):	
11.8.1	Correct type of lamps fitted (559.3.1)	N/A
11.8.2	Installed to minimize build-up of heat (421.1.2; 559.4.1)	N/A
11.9	Adequacy of working space/accessibility to equipment (132.12; 513.1)	N/A
12.0	LOCATION(S) CONTAINING A BATH OR SHOWER (SECTION 701)	
12.1	Additional protection for all low voltage (LV) circuits by RCD not exceeding 30mA (701.411.3.3)	N/A
12.2	Where used as a protective measure, requirements for SELV or PELV met (701.414.4.5)	N/A
12.3	Shaver sockets comply with BS EN 61558-2-5 formerly BS 3535 (701.512.3)	N/A
12.4	Presence of supplementary bonding conductors, unless not required by BS 7671:2018 (701.415.2)	N/A
12.5	Low voltage (e.g. 230 volt) socket-outlets sited at least 3m from zone 1 (701.512.3)	N/A
12.6	Suitability of equipment for external influences for installed location in terms of IP rating (701.512.2)	N/A
12.7	Suitability of accessories and controlgear etc. for a particular zone (701.512.3)	N/A
12.8	Suitability of current-using equipment for particular position within the location (701.55)	N/A
13.0	PART 7 SPECIAL INSTALLATIONS OR LOCATIONS	
13.1	N/A	N/A
13.2	N/A	N/A
13.3	N/A	N/A

All boxes must be completed. 'tick' indicates that an inspection or test was carried out and that the result was satisfactory. 'X' indicates than an inspection or test was carried out and the result is not satisfactory. 'N/A' indicates that an inspection or test was not applicable to the particular installation. 'LIM' indicates that, exceptionally, a limitation agreed with the person ordering the work prevented the inspection or test being carried out.

EXAMPLE

16 SCHEDULE OF CIRCUIT DETAILS AND TEST RESULTS

Distribution board designation: D.B.2/EXT Location: Electrical wall

Circuit number and phase	Circuit designation	Type of wiring	Reference Method	Number of points served	Circuit conductors: csa Live mm²	Circuit conductors: csa cpc mm²	Max disconnect time permitted by BS7671 s	Overcurrent protective devices BS(EN)	Type No	Rating A	Capacity kA	RCD Operating current, IΔn mA	Maximum Z_s permitted by BS7671 Ω	Circuit impedances (Ohms) Ring final circuits only (measured end to end) r_1 (Line)	r_n (Neutral)	r_2 (cpc)	All circuits (one column to be completed) R_1+R_2	R_2	Insulation resistance Live - Live MΩ	Live - Earth MΩ	Test voltage V	Polarity ✔	Maximum measured earth fault loop impedance Zs Ω	RCD Disconnection time ms	RCD Test button operation ✔	AFDD Test button operation ✔
1 L1	---	---	---	---	---	---	---	---	---	---	---	---	N/A	---	---	---	---	---	---	---	---	---	---	---	---	---
1 L2	---	---	---	---	---	---	---	---	---	---	---	---	N/A	---	---	---	---	---	---	---	---	---	---	---	---	---
1 L3	Temp site sockets	A	C	11	6	2.5	0.4	61009	B	32	10	30	1.37	---	---	---	0.59	N/A	>1000	>1000	500v	Pass	0.83	19.3	✔	N/A
2 L1	---	---	---	---	---	---	---	---	---	---	---	---	N/A	---	---	---	---	---	---	---	---	---	---	---	---	---
2 L2	---	---	---	---	---	---	---	---	---	---	---	---	N/A	---	---	---	---	---	---	---	---	---	---	---	---	---
2 L3	---	---	---	---	---	---	---	---	---	---	---	---	N/A	---	---	---	---	---	---	---	---	---	---	---	---	---
3 L1	---	---	---	---	---	---	---	---	---	---	---	---	N/A	---	---	---	---	---	---	---	---	---	---	---	---	---
3 L2	---	---	---	---	---	---	---	---	---	---	---	---	N/A	---	---	---	---	---	---	---	---	---	---	---	---	---
3 L3	---	---	---	---	---	---	---	---	---	---	---	---	N/A	---	---	---	---	---	---	---	---	---	---	---	---	---
4 L1	---	---	---	---	---	---	---	---	---	---	---	---	N/A	---	---	---	---	---	---	---	---	---	---	---	---	---
4 L2	---	---	---	---	---	---	---	---	---	---	---	---	N/A	---	---	---	---	---	---	---	---	---	---	---	---	---

CODES FOR TYPE OF WIRING	A Thermoplastic insulated/sheathed cables	B Thermoplastic cables in metallic conduit	C Thermoplastic cables in nonmetallic conduit	D Thermoplastic cables in metallic trunking	E Thermoplastic cables in nonmetallic trunking	F Thermoplastic /SWA cables	G Thermosetting /SWA cables	H Mineral insulated cables	O - Other
									B

17 BOARD CHARACTERISTICS

APPLIES WHEN THE BOARD IS NOT CONNECTED TO THE ORIGIN OF THE INSTALLATION

Supply to this distribution board is from: MCCB Panel LV/MPB2 No of phases: 3 Confirmation of supply polarity: ✔

Overcurrent protective device for the distribution circuit: BS(EN): 60947-3 Isolator Rating: 125 A Nominal Voltage: 400 V Zs: 0.14 Ω Ipf: 4.2 kA

RCD BS(EN): N/A No of poles: N/A Rating: N/A mA Disconnection time at In: N/A ms Disconnection time at 5In: N/A ms

18 DETAILS OF TEST INSTRUMENTS

Details of Test Instruments used (state serial and/or asset numbers):

Multi-functional: FLUKE MFT S/N: SERIAL NO. Insulation resistance: Continuity:

Earth electrode resistance: Earth fault loop impedance: RCD:

19 TESTED BY

Name: NAME Position: Electrician Signature: Date: 29/04/2022

SCHEDULE OF CIRCUIT DETAILS AND TEST RESULTS

Distribution board designation: D.B.2/EXT Location: Electrical wall

Circuit number and phase	Circuit designation	Type of wiring	Reference Method	Number of points served	Circuit conductors: csa		Max disconnect time permitted by BS7671	Overcurrent protective devices				RCD	Maximum Z_s permitted by BS7671	Circuit impedances (Ohms)					Insulation resistance			Polarity	Maximum measured earth fault loop impedance Zs	RCD		AFDD
					Live	cpc		BS(EN)	Type No	Rating	Capacity	Operating current, IΔn		Ring final circuits only (measured end to end)			All circuits (one column to be completed)		Live - Live	Live - Earth	Test voltage			Disconnection time	Test button operation	Test button operation
														r_1	r_n	r_2	R_1+R_2	R_2								
					mm^2	mm^2	s			A	kA	mA	Ω	(Line)	(Neutral)	(cpc)			MΩ	MΩ	V	✔	Ω	ms	✔	✔
4 L3	---	---	---	---	---	---	---	---	---	---	---	---	N/A	---	---	---	---	---	---	---	---	---	---	---	---	---
5 L1	---	---	---	---	---	---	---	---	---	---	---	---	N/A	---	---	---	---	---	---	---	---	---	---	---	---	---
5 L2	---	---	---	---	---	---	---	---	---	---	---	---	N/A	---	---	---	---	---	---	---	---	---	---	---	---	---
5 L3	---	---	---	---	---	---	---	---	---	---	---	---	N/A	---	---	---	---	---	---	---	---	---	---	---	---	---
6 L1	---	---	---	---	---	---	---	---	---	---	---	---	N/A	---	---	---	---	---	---	---	---	---	---	---	---	---
6 L2	---	---	---	---	---	---	---	---	---	---	---	---	N/A	---	---	---	---	---	---	---	---	---	---	---	---	---
6 L3	---	---	---	---	---	---	---	---	---	---	---	---	N/A	---	---	---	---	---	---	---	---	---	---	---	---	---
7 L1	---	---	---	---	---	---	---	---	---	---	---	---	N/A	---	---	---	---	---	---	---	---	---	---	---	---	---
7 L2	---	---	---	---	---	---	---	---	---	---	---	---	N/A	---	---	---	---	---	---	---	---	---	---	---	---	---
7 L3	---	---	---	---	---	---	---	---	---	---	---	---	N/A	---	---	---	---	---	---	---	---	---	---	---	---	---
8 L1	---	---	---	---	---	---	---	---	---	---	---	---	N/A	---	---	---	---	---	---	---	---	---	---	---	---	---
8 L2	---	---	---	---	---	---	---	---	---	---	---	---	N/A	---	---	---	---	---	---	---	---	---	---	---	---	---
8 L3	---	---	---	---	---	---	---	---	---	---	---	---	N/A	---	---	---	---	---	---	---	---	---	---	---	---	---
9 L1	---	---	---	---	---	---	---	---	---	---	---	---	N/A	---	---	---	---	---	---	---	---	---	---	---	---	---
9 L2	---	---	---	---	---	---	---	---	---	---	---	---	N/A	---	---	---	---	---	---	---	---	---	---	---	---	---
9 L3	---	---	---	---	---	---	---	---	---	---	---	---	N/A	---	---	---	---	---	---	---	---	---	---	---	---	---
10 L1	---	---	---	---	---	---	---	---	---	---	---	---	N/A	---	---	---	---	---	---	---	---	---	---	---	---	---
10 L2	---	---	---	---	---	---	---	---	---	---	---	---	N/A	---	---	---	---	---	---	---	---	---	---	---	---	---
10 L3	---	---	---	---	---	---	---	---	---	---	---	---	N/A	---	---	---	---	---	---	---	---	---	---	---	---	---
11 L1	---	---	---	---	---	---	---	---	---	---	---	---	N/A	---	---	---	---	---	---	---	---	---	---	---	---	---
11 L2	---	---	---	---	---	---	---	---	---	---	---	---	N/A	---	---	---	---	---	---	---	---	---	---	---	---	---

CODES FOR TYPE OF WIRING	A	B	C	D	E	F	G	H	O - Other
	Thermoplastic insulated/sheathed cables	Thermoplastic cables in metallic conduit	Thermoplastic cables in nonmetallic conduit	Thermoplastic cables in metallic trunking	Thermoplastic cables in nonmetallic trunking	Thermoplastic /SWA cables	Thermosetting /SWA cables	Mineral insulated cables	B

SCHEDULE OF CIRCUIT DETAILS AND TEST RESULTS

Distribution board designation: D.B.2/EXT Location: Electrical wall

Circuit number and phase	Circuit designation	Type of wiring	Reference Method	Number of points served	Circuit conductors: csa		Max disconnect time permitted by BS7671	Overcurrent protective devices				RCD	Maximum Z_s permitted by BS7671	Circuit impedances (Ohms)					Insulation resistance			Polarity	Maximum measured earth fault loop impedance Zs	RCD		AFDD
														Ring final circuits only (measured end to end)			All circuits (one column to be completed)							Disconnection time	Test button operation	Test button operation
					Live mm^2	cpc mm^2	s	BS(EN)	Type No	Rating A	Capacity kA	Operating current, $I\Delta n$ mA	Ω	r_1 (Line)	r_n (Neutral)	r_2 (cpc)	R_1+R_2	R_2	Live - Live MΩ	Live - Earth MΩ	Test voltage V	✔	Ω	ms	✔	✔
11 L3	---	---	---	---	---	---	---	---	---	---	---	---	N/A	---	---	---	---	---	---	---	---	---	---	---	---	---
12 L1	---	---	---	---	---	---	---	---	---	---	---	---	N/A	---	---	---	---	---	---	---	---	---	---	---	---	---
12 L2	---	---	---	---	---	---	---	---	---	---	---	---	N/A	---	---	---	---	---	---	---	---	---	---	---	---	---
12 L3	---	---	---	---	---	---	---	---	---	---	---	---	N/A	---	---	---	---	---	---	---	---	---	---	---	---	---

CODES FOR TYPE OF WIRING	A	B	C	D	E	F	G	H	O - Other
	Thermoplastic insulated/sheathed cables	Thermoplastic cables in metallic conduit	Thermoplastic cables in nonmetallic conduit	Thermoplastic cables in metallic trunking	Thermoplastic cables in nonmetallic trunking	Thermoplastic /SWA cables	Thermosetting /SWA cables	Mineral insulated cables	B

SAMPLE

ELECTRICAL INSTALLATION CERTIFICATE
GUIDANCE FOR RECIPIENTS

(to be appended to the Certificate)

This safety Certificate has been issued to confirm that the electrical installation work to which it relates has been designed, constructed and inspected and tested in accordance with British Standard 7671 (as amended) (The IET Wiring Regulations).

You should have received an original Certificate and the contractor should have retained a duplicate Certificate. If you were the person ordering the work, but not the user of the installation, you should pass this Certificate, or a full copy of it including the schedules, immediately to the user.

The 'original' Certificate should be retained in a safe place and be shown to any person inspecting or undertaking further work on the electrical installation in the future. If you later vacate the property, this Certificate will demonstrate to the new owner that the electrical installation complied with the requirements of British Standard 7671 at the time the certificate was issued. The Construction (Design and Management) Regulations require that for a project covered by those regulations, a copy of this Certificate, together with schedules is included in the project health and safety documentation.

For safety reasons, the electrical installation will need to be inspected at appropriate intervals by a competent person. The maximum time interval recommended before the next inspection it stated on Page 1 under 'Next Inspection'.

This Certificate is intended to be issued only for a new electrical installation or new new work associated with an alteration or addition to an existing installation. It should not have been issued for the inspection of an existing electrical installation. An 'Electrical Installation Condition Report' should be issued for such an inspection.

This Certificate is only valid if a Schedule of Inspections and Schedule of Test Results are appended.

SAMPLE

5. Test & Commissioning Certificates

5.03

Chlorination Certificate

Source file: Chlorination Certificate.pdf

SAMPLE

INSTALLER LOGO

Chlorination Certificate

WE CERTIFY

that the following water services have been chlorinated

Date: 05/08/22

Site: SITE ADDRESS ADDRESS

Engineers Report: Chlorination of domestic cold water service to new ground & 1st floor WC's, Kitchenettes and mains cold water services. Approx 45 meters

Engineer Signed..... NAME ..... for INSTALLER Contracting LTD

Cleaned and Chlorinated to comply with the current LB,ACOP and Control of Legionnaires Disease.

SCHEME LOGO SCHEME LOGO SCHEME LOGO

INSTALLER ADDRESS

INSTALLER P: CONTACT

EXAMPLE

SAMPLE

INSTALLER

ADDRESS

W: INSTALLER P: CONTACT

5. Test & Commissioning Certificates

5.04

Electrical Installation Certificate

Source file: Electrical Installation Certificate.pdf

SAMPLE

ELECTRICAL INSTALLATION CERTIFICATE

Requirements For Electrical Installations - BS 7671 IET Wiring Regulations

Certificate Reference: REF

1 DETAILS OF THE CLIENT

Client Address: CLIENT

ADDRESS

2 DETAILS OF THE INSTALLATION

Installation Address: ADDRESS

Extent of the installation covered by this certificate: None

The installation is: New installation ✔ | Addition to an existing installation N/A | Alteration to an existing installation N/A

3 DESIGN

I/We being the person(s) responsible for the design of the electrical installation (as indicated by my/our signatures below), particulars of which are described above, having exercised reasonable skill and care when carrying out the design, hereby CERTIFY that the design work for which I/we have been responsible is to the best of my/our knowledge and belief in accordance with BS 7671:2018, amended to 2018 except for the departures, if any, detailed as follows.

Details of departures from BS 7671 (Regulations 120.3, 133.5): None

Details of permitted exceptions (Regulations 411.3.3): Risk assessment attached

The extent of liability of the signatory/signatories is limited to the work described above as the subject of this certificate.

For the DESIGN of the installation:

Name:	Position:	Signature:	Date:
N/A	N/A	N/A	N/A

Where there is divided responsibility for the design:

Name:	Position:	Signature:	Date:
N/A	N/A	N/A	N/A

4 CONSTRUCTION

I/We being the person(s) responsible for the construction of the electrical installation (as indicated by my/our signatures below), particulars of which are described above, having exercised reasonable skill and care when carrying out the construction, hereby CERTIFY that the construction work for which I/we have been responsible is to the best of my/our knowledge and belief in accordance with BS 7671:2018, amended to 2018 except for the departures, if any, detailed as follows.

Details of departures from BS 7671 (Regulations 120.3, 133.5): None

The extent of liability of the signatory/signatories is limited to the work described above as the subject of this certificate.

For the CONSTRUCTION of the installation:

Name:	Position:	Signature:	Date:
N/A	N/A	N/A	N/A

5 INSPECTION AND TESTING

I/We being the person(s) responsible for the inspection and testing of the electrical installation (as indicated by my/our signatures below), particulars of which are described above, having exercised reasonable skill and care when carrying out the inspection and testing, hereby CERTIFY that the inspection and testing work for which I/we have been responsible is to the best of my/our knowledge and belief in accordance with BS 7671:2018, amended to 2018 except for the departures, if any, detailed as follows.

Details of departures from BS 7671 (Regulations 120.3, 133.5): None

The extent of liability of the signatory/signatories is limited to the work described above as the of this certificate.

For the INSPECTION AND TESTING of the installation:

Name:	Position:	Signature:	Date:
NAME	Electrician	SIGNATURE	29/07/2022

6 DESIGN, CONSTRUCTION, INSPECTION AND TESTING

I/We being the person(s) responsible for the design, construction, inspection and testing of the electrical installation (as indicated by my/our signatures below), particulars of which are described above, having exercised reasonable skill and care when carrying out the design, construction, inspection and testing, hereby CERTIFY that the design work for which I/we have been responsible is to the best of my/our knowledge and belief in accordance with BS 7671:2018, amended to 2018 except for the departures, if any, detailed as follows.

Details of departures from BS 7671 (Regulations 120.3, 133.5): None

The extent of liability of the signatory/signatories is limited to the work described above as the subject of this certificate.

For the DESIGN, the CONSTRUCTION, and the INSPECTION AND TESTING of the installation:

Name:	Position:	Signature:	Date:
N/A	N/A	N/A	N/A

7 NEXT INSPECTION

I/We the designer(s), RECOMMEND that this installation is further inspected and tested after an interval of not more than: 10 Years or change of tenant/owner

8 DETAILS OF THE ELECTRICAL CONTRACTOR

Design (1) — Trading Title: INSTALLER

Address: ADDRESS / ADDRESS / ADDRESS — Postcode: ADDRESS

Registration Number (if applicable): REG NO.

Telephone Number: CONTACT

Design (2) — Trading Title: Same as Above

Address: — Postcode:

Registration Number (if applicable):

Telephone Number:

Construction — Trading Title: Same as Above

Address: — Postcode:

Registration Number (if applicable):

Telephone Number:

Inspection and Testing — Trading Title: Same as Above

Address: — Postcode:

Registration Number (if applicable):

Telephone Number:

9 SUPPLY CHARACTERISTICS AND EARTHING ARRANGEMENTS

Earthing Arrangements

TN-S	N/A
TN-C-S	✔
TNC	N/A
TT	N/A
IT	N/A

Number and Type of Live Conductors

		ac:	✔	dc:	N/A
1-phase (2 wire):	N/A	1-phase (3 wire):	N/A	2 pole:	N/A
2-phase (3 wire):	N/A			3 pole:	N/A
3-phase (3 wire):	N/A	3-phase (4 wire):	✔	Other:	N/A
Other:	N/A				

Confirmation of supply polarity:

Nature of Supply Parameters

Nominal voltage(s): U:	230 V Uo: 400 V
Nominal frequency, f:	50 Hz
Prospective fault current, Ipf:	9.2 kA
External earth fault loop impedance, Ze:	0.03 Ω
Number of supplies:	2

Supply Protective Device

BS(EN):	LIM
Type:	LIM
Rated current:	LIM A
Short-circuit capacity:	LIM kA

10 PARTICULARS OF INSTALLATION REFERRED TO IN THE CERTIFICATE

Means of Earthing

Distributor's facility:	✔
Installation earth electrode:	N/A

Details of Installation Earth Electrode (where applicable)

Type:	N/A	Location:	N/A
Resistance to Earth:	N/A Ω	Method of measurement:	N/A

Maximum Demand (Load): N/A

Protective measure(s) against electric shock: ADS

Main Switch / Switch-Fuse / Circuit-Breaker / RCD

Type BS(EN):	60947-2 MCCB	Current rating:	250 A	Supply conductors material:	Copper
Number of poles:	4	Fuse/device rating or setting:	N/A A	Supply conductors csa:	70 mm²
		Voltage rating:	400 V		

If RCD main switch:

Rated residual operating current (IΔn):	N/A mA
Rated time delay:	N/A ms
Measured operating time (at IΔn):	N/A ms

Earthing and Protective Bonding Conductors

Earthing conductor — Conductor material: Copper — csa: 35 mm² — Connection/continuity verified:

Main protective bonding conductors — Conductor material: Copper — csa: 25 mm² — Connection/continuity verified:

Bonding of extraneous-conductive parts

To water installation pipes:	✔	To gas installation pipes:	
To oil installation pipes:		To lightning protection:	
To structural steel:	✔	To other service(s):	N/A

11 COMMENTS ON EXISTING INSTALLATION

None

12 INSPECTION SCHEDULE

Item No	Description	Outcome
1.0	EXTERNAL CONDITION OF INTAKE EQUIPMENT (VISUAL INSPECTION ONLY)	
1.1	Service cable	✔
1.2	Service head	✔
1.3	Earthing arrangement	N/A
1.4	Meter tails	✔
1.5	Metering equipment	✔
1.6	Isolator (where present)	✔
2.0	PARALLEL OR SWITCHED ALTERNATIVE SOURCES OF SUPPLY	
2.1	Presence of adequate arrangements where generator to operate as a switched alternative (551.6):	
2.1.1	Dedicated earthing arrangement independent of that of the public supply (551.4.3.2.1)	N/A
2.2	Presence of adequate arrangements where generator to operate in parallel with the public supply system (551.7):	
2.2.1	Correct connection of generator in parallel (551.7.2)	N/A
2.2.2	Compatibility of characteristics of means of generation (551.7.3)	N/A
2.2.3	Means to provide automatic disconnection of generator in the event of loss of public supply system or voltage or frequency deviation beyond declared values (551.7.4)	N/A
2.2.4	Means to prevent connection of generator in the event of loss of public supply system or voltage or frequency deviation beyond declared values (551.7.5)	N/A
2.2.5	Means to isolate generator from the public supply system (551.7.6)	N/A
3.0	AUTOMATIC DISCONNECTION OF SUPPLY	
3.1	Presence and adequacy of protective earthing/bonding arrangements (411.3; Chapter 54):	
3.1.1	Distributor's earthing arrangement (542.1.2.1; 542.1.2.2), or installation earth electrode arrangement (542.1.2.3)	✔
3.1.2	Earthing conductor and connections (Section 526; 542.3; 542.3.2; 543.1.1)	✔
3.1.3	Main protective bonding conductors and connections (Section 526; 544.1; 544.1.2)	✔
3.1.4	Earthing/bonding labels at all appropriate locations (514.13)	✔
3.2	Accessibility of:	
3.2.1	Earthing conductor connections	✔
3.2.2	All protective bonding connections (543.3.2)	✔
3.3	FELV – requirements satisfied (411.7; 411.7.1)	✔
4.0	BASIC AND FAULT PROTECTION (where used, confirmation that the requirements are satisfied)	
4.1	SELV (Section 414)	✔
4.2	PELV (Section 414)	✔
4.3	Double insulation (Section 412)	✔
4.4	Reinforced insulation (Section 412)	N/A
5.0	BASIC PROTECTION	
5.1	Insulation of live parts (416.1)	✔
5.2	Barriers or enclosures (416.2; 416.2.1)	✔
5.3	Obstacles (Section 417; 417.2.1; 417.2.2)	N/A
5.4	Placing out of reach (Section 417; 417.3)	N/A
6.0	FAULT PROTECTION	
6.1	Non-conducting location (418.1)	✔
6.2	Earth-free local equipotential bonding (418.2)	✔
6.3	Electrical separation (Section 413; 418.3)	✔

SAMPLE

13 INSPECTION SCHEDULE (CONTINUED)

Item No	Description	Outcome
7.0	ADDITIONAL PROTECTION	
7.1	RCDs not exceeding 30 mA as specified (415.1)	✔
7.2	Supplementary bonding (Section 415; 415.2)	✔
8.0	DISTRIBUTION EQUIPMENT	
8.1	Security of fixing (134.1.1)	✔
8.2	Insulation of live parts not damaged during erection (416.1)	✔
8.3	Adequacy/security of barriers (416.2)	✔
8.4	Suitability of enclosures for IP and fire ratings (416.2; 421.1.6; 421.1.201; 526.5)	✔
8.5	Enclosures not damaged during installation (134.1.1)	✔
8.6	Presence and effectiveness of obstacles (417.2)	N/A
8.7	Components are suitable according to manufacturers assembly instructions or literature (536.4.203)	✔
8.8	Presence of main switch(es), linked where required (462.1.201)	✔
8.9	Operation of main switch(es) (functional check) (643.10)	✔
8.10	Manual operation of circuit-breakers and RCDs to prove functionality (643.10)	✔
8.11	Confirmation that integral test button/switch causes RCD(s) to trip when operated (functional check) (643.10)	✔
8.12	RCD(s) provided for fault protection, where specified (411.4.204; 411.5.2; 531.2)	✔
8.13	RCD(s) provided for additional protection, where specified (415.1)	✔
8.14	Confirmation overvoltage protection (SPDs) provided where specified (534.4.1.1)	N/A
8.15	Presence of RCD six-monthly test notice at or near the origin (514.12.2)	✔
8.16	Presence of diagrams, charts or schedules at or near each distribution board, where required (514.9.1)	✔
8.17	Presence of non-standard (mixed) cable colour warning notice at or near the appropriate distribution board, where required (514.14)	✔
8.18	Presence of alternative supply warning notice at or near (514.15):	
8.18.1	The origin	N/A
8.18.2	The meter position, if remote from origin	N/A
8.18.3	The distribution board to which the alternative/additional sources are connected	N/A
8.18.4	All points of isolation of ALL sources of supply	N/A
8.19	Presence of next inspection recommendation label (514.12.1)	✔
8.20	Presence of other required labelling (Section 514)	✔
8.21	Selection of protective device(s) and base(s); correct type and rating (411.3.2; 411.4, .5, .6; Sections 432, 433, 434)	✔
8.22	Single-pole protective devices in line conductors only (132.14.1; 530.3.3; 643.6)	✔
8.23	Protection against mechanical damage where cables enter equipment (522.8.1; 522.8.5; 522.8.11)	✔
8.24	Protection against electromagnetic effects where cables enter ferromagnetic enclosures (521.5.1)	✔
8.25	Confirmation that ALL conductor connections, including connections to busbars, are correctly located in terminals and are tight and secure (526.1)	✔
9.0	CIRCUITS	
9.1	Identification of conductors (514.3.1)	✔
9.2	Cables correctly supported throughout (522.8.5; 521.10.202)	✔
9.3	Examination of cables for signs of mechanical damage during installation (522.6.1; 522.8.1; 522.8.3)	✔
9.4	Examination of insulation of live parts, not damaged during erection (522.6.1; 522.8.1)	✔
9.5	Non-sheathed cables protected by enclosure in conduit, ducting or trunking (521.10.1)	✔

SAMPLE

14 INSPECTION SCHEDULE (CONTINUED)

Item No	Description	Outcome
9.6	Suitability of containment systems (including flexible conduit) (Section 522)	✔
9.7	Correct temperature rating of cable insulation (522.1.1; Table 52.1)	✔
9.8	Adequacy of cables for current-carrying capacity with regard for the type and nature of installation (Section 523)	✔
9.9	Adequacy of protective devices: type and fault current rating for fault protection (434.5)	✔
9.10	Presence and adequacy of circuit protective conductors (411.3.1; 543.1)	✔
9.11	Coordination between conductors and overload protective devices (433.1; 533.2.1)	✔
9.12	Wiring systems and cable installation methods/practices with regard to the type and nature of installation and external influences (Section 522)	✔
9.13	Cables concealed under floors, above ceilings, in walls/partitions, adequately protected against damage (522.6.201, 522.6.202, 522.6.203, 522.6.204)	✔
9.14	Provision of additional protection by RCDs having rated residual operating current (In) not exceeding	
9.14.1	For all socket-outlets of rating (32A) or less, unless exempt (411.3.3)	✔
9.14.2	Supplies for mobile equipment not exceeding 32A rating for use outdoors (411.3.3)	✔
9.14.3	For cables concealed in walls at a depth of less than 50mm (522.6.202, .203)	✔
9.14.4	For cables concealed in walls/partitions containing metal parts regardless of depth (522.6.202; .203)	✔
9.14.5	Circuits supplying luminaires within domestic (household) premises (411.3.4)	✔
9.15	Provision of fire barriers, sealing arrangements so as to minimize the spread of fire (Section 527)	✔
9.16	Band II cables segregated/separated from Band I cables (528.1)	✔
9.17	Cables segregated/separated from non-electrical services (528.3)	✔
9.18	Termination of cables at enclosures (Section 526):	
9.18.1	Connections under no undue strain (522.8.5; 526.6)	✔
9.18.2	No basic insulation of a conductor visible outside enclosure (526.8)	✔
9.18.3	Connections of live conductors adequately enclosed (526.5)	✔
9.18.4	Adequately connected at point of entry to enclosure (glands, bushes etc.) (522.8.5)	✔
9.19	Suitability of circuit accessories for external influences (512.2)	✔
9.20	Circuit accessories not damaged during erection (134.1.1)	✔
9.21	Single-pole devices for switching or protection in line conductors only (132.14.1, 530.3.3; 643.6)	✔
9.22	Adequacy of connections, including cpcs, within accessories and at fixed and stationary equipment (Section 526)	✔
10.0	ISOLATION AND SWITCHING	
10.1	Isolators (462; 537.2):	
10.1.1	Presence and location of appropriate devices (Section 462; 537.2.7)	✔
10.1.2	Capable of being secured in the OFF position (537.2.4)	✔
10.1.3	Correct operation verified (functional check) (643.10)	✔
10.1.4	The installation, circuit or part thereof that will be isolated clearly identified by location and/or durable marking (537.2.7)	✔
10.1.5	Warning notice posted in situation where live parts cannot be isolated by the operation of a single device (514.11.1; 537.1.2)	✔
10.2	Switching off for mechanical maintenance (Section 464; 537.3.2):	
10.2.1	Presence of appropriate devices (464.1; 537.3.2)	✔
10.2.2	Acceptable location - state if local or remote from equipment in question (537.3.2.4)	✔
10.2.3	Capable of being secured in the OFF position (464.2)	✔
10.2.4	Correct operation verified (functional check) (643.10)	✔
10.2.5	The circuit or part thereof to be disconnected clearly identified by location and/or durable marking (537.3.2.3; 537.3.2.4)	✔

15 INSPECTION SCHEDULE (CONTINUED)

Item No	Description	Outcome
10.3	Emergency switching/stopping (Section 465; 537.3.3; 537.4):	
10.3.1	Presence of appropriate devices (465.1; 537.3.3; 537.4)	✔
10.3.2	Readily accessible for operation where danger might occur (537.3.3.6)	✔
10.3.3	Correct operation verified (functional check) (643.10)	✔
10.3.4	The installation, circuit or part thereof to be disconnected clearly identified by location and/or durable marking (537.3.3.6)	✔
10.4	Functional switching (463.1; 537.3.1):	
10.4.1	Presence of appropriate devices (537.3.1.1; 537.3.1.2)	✔
10.4.2	Correct operation verified (functional check) (537.3.1.1; 537.3.1.2; 643.10)	✔
11.0	CURRENT-USING EQUIPMENT (PERMANENTLY CONNECTED)	
11.1	Suitability of equipment in terms of IP and fire ratings (416.2; 421.1; 421.1.201; 526.5)	✔
11.2	Enclosure not damaged/deteriorated during installation so as to impair safety (134.1.1)	✔
11.3	Suitability for the environment and external influences (512.2)	✔
11.4	Security of fixing (134.1.1)	✔
11.5	Cable entry holes in ceilings above luminaires, sized or sealed so as to restrict the spread of fire (527.2)	✔
11.6	Provision of undervoltage protection, where specified (Section 445)	✔
11.7	Provision of overload protection, where specified (Section 433; 552.1)	✔
11.8	Recessed luminaires (downlighters):	
11.8.1	Correct type of lamps fitted (559.3.1)	✔
11.8.2	Installed to minimize build-up of heat (421.1.2; 559.4.1)	✔
11.9	Adequacy of working space/accessibility to equipment (132.12; 513.1)	✔
12.0	LOCATION(S) CONTAINING A BATH OR SHOWER (SECTION 701)	
12.1	Additional protection for all low voltage (LV) circuits by RCD not exceeding 30mA (701.411.3.3)	N/A
12.2	Where used as a protective measure, requirements for SELV or PELV met (701.414.4.5)	N/A
12.3	Shaver sockets comply with BS EN 61558-2-5 formerly BS 3535 (701.512.3)	N/A
12.4	Presence of supplementary bonding conductors, unless not required by BS 7671:2018 (701.415.2)	N/A
12.5	Low voltage (e.g. 230 volt) socket-outlets sited at least 3m from zone 1 (701.512.3)	N/A
12.6	Suitability of equipment for external influences for installed location in terms of IP rating (701.512.2)	N/A
12.7	Suitability of accessories and controlgear etc. for a particular zone (701.512.3)	N/A
12.8	Suitability of current-using equipment for particular position within the location (701.55)	N/A
13.0	PART 7 SPECIAL INSTALLATIONS OR LOCATIONS	
13.1	N/A	
13.2	N/A	
13.3	N/A	

All boxes must be completed. 'tick' indicates that an inspection or test was carried out and that the result was satisfactory. 'X' indicates than an inspection or test was carried out and the result is not satisfactory. 'N/A' indicates that an inspection or test was not applicable to the particular installation. 'LIM' indicates that, exceptionally, a limitation agreed with the person ordering the work prevented the inspection or test being carried out.

EXAMPLE

16 SCHEDULE OF CIRCUIT DETAILS AND TEST RESULTS

Distribution board designation: DB2/1LP Location: MAINS

Circuit number and phase	Circuit designation	Type of wiring	Reference Method	Number of points served	Circuit conductors: csa Live mm²	Circuit conductors: csa cpc mm²	Max disconnect time permitted by BS7671 s	Overcurrent protective devices BS(EN)	Type No	Rating A	Capacity kA	RCD Operating current, IΔn mA	Maximum Zs permitted by BS7671 Ω	Circuit impedances (Ohms) Ring final circuits only (measured end to end) r1 (Line)	rn (Neutral)	r2 (cpc)	All circuits (one column to be completed) R1+R2	R2	Insulation resistance Live - Live MΩ	Live - Earth MΩ	Test voltage V	Polarity ✔	Maximum measured earth fault loop impedance Zs Ω	RCD Disconnection time ms	RCD Test button operation ✔	AFDD Test button operation ✔
1L3	UNDER CROFT LIGHTS	A	100	9	1.5	1.0	0.4	61009	C	10	10	30	2.19	-	-	-	1.07	-	>100	>100	250	✔	1.83	11	✔	N/A
2L1	FRONT DOOR EM	A	100	2	1.5	1.0	0.4	61009	C	10	10	30	2.19	-	-	-	0.48	-	>100	>100	250	✔	0.65	11	✔	N/A
2L2	CCT5	A	100	2	1.5	1.0	0.4	61009	C	10	10	30	2.19	-	-	-	1.06	-	>100	>100	250	✔	1.23	11	✔	N/A
2L3	CCT7	A	100	8	1.5	1.0	0.4	61009	C	10	10	30	2.19	-	-	-	1.64	-	>100	> 200	250	✔	1.81	11	✔	N/A
3 L1	CCT6	A	100	15	1.5	1.0	0.4	61009	C	10	10	30	2.19	-	-	-	0.89	-	>100	> 200	250	✔	1.06	11	✔	N/A
3 L2	CCT1	A	100	4	1.5	1.0	0.4	61009	C	10	10	30	2.19	-	-	-	0.76	-	>100	> 200	250	✔	0.93	8.5	✔	N/A
3 L3	CCT2	A	100	12	1.5	1.0	0.4	61009	C	10	10	30	2.19	-	-	-	1.36	-	>100	> 200	250	✔	1.53	8.4	✔	N/A
5L1	OVER DOOR HEATERS	A	100	2	4	2.5	0.4	61009	C	20	10	30	1.09	-	-	-	0.37	-	>100	> 200	250	✔	0.54	8.9	✔	N/A
6 L1	SHOWER	A	100	1	10	4	0.4	61009	C	40	10	30	0.55	-	-	-	0.50	-	>100	> 200	250	✔	0.67	12.1	✔	N/A
6 L2	HAND DRYERS 1ST FLOOR	A	100	5	4	2.5	0.4	61009	C	32	10	30	0.68	0.21	0.21	0.61	0.55	-	>100	> 200	250	✔	0.57	11.5	✔	N/A
6 L3	HI BAY LIGHTS	O	C	10	2.5	2.5	0.4	61009	C	10	10	30	2.19	-	-	-	1.34	-	>100	> 200	250	✔	1.51	11.4	✔	N/A

CODES FOR TYPE OF WIRING	A Thermoplastic insulated/sheathed cables	B Thermoplastic cables in metallic conduit	C Thermoplastic cables in nonmetallic conduit	D Thermoplastic cables in metallic trunking	E Thermoplastic cables in nonmetallic trunking	F Thermoplastic /SWA cables	G Thermosetting /SWA cables	H Mineral insulated cables	O - Other
									N/A

17 BOARD CHARACTERISTICS

APPLIES WHEN THE BOARD IS NOT CONNECTED TO THE ORIGIN OF THE INSTALLATION

Supply to this distribution board is from: MAIN MCCB PANEL No of phases: 3 Confirmation of supply polarity: N/A

Overcurrent protective device for the distribution circuit: BS(EN): 60947-2 Rating: 100 A Nominal Voltage: 400 V Zs: 0.17 Ω Ipf: 2.8 kA

RCD BS(EN): N/A No of poles: 3 Rating: N/A mA Disconnection time at In: N/A ms Disconnection time at 5In: N/A ms

18 DETAILS OF TEST INSTRUMENTS

Details of Test Instruments used (state serial and/or asset numbers):

Multi-functional: 3270047 Insulation resistance: - Continuity: -

Earth electrode resistance: - Earth fault loop impedance: - RCD: -

19 TESTED BY

Name: NAME Position: Electrician Signature: SIGNATURE Date: 29/07/2022

SCHEDULE OF CIRCUIT DETAILS AND TEST RESULTS

Distribution board designation: DB2/1LP Location: MAINS

Circuit number and phase	Circuit designation	Type of wiring	Reference Method	Number of points served	Circuit conductors: csa Live mm²	Circuit conductors: csa cpc mm²	Max disconnect time permitted by BS7671 s	Overcurrent protective devices BS(EN)	Type No	Rating A	Capacity kA	RCD Operating current, IΔn mA	Maximum Zs permitted by BS7671 Ω	Circuit impedances (Ohms) Ring final circuits only (measured end to end) r1 (Line)	rn (Neutral)	r2 (cpc)	All circuits (one column to be completed) R1+R2	R2	Insulation resistance Live - Live MΩ	Live - Earth MΩ	Test voltage V	Polarity ✔	Maximum measured earth fault loop impedance Zs Ω	RCD Disconnection time ms	RCD Test button operation ✔	AFDD Test button operation ✔
7L3	WATER HEATER	A	100	1	4	2.5	0.4	61009	C	20	10	30	1.09	-	-	-	0.18	-	>100	> 200	250	✔	0.35	8.9	✔	N/A
8L2	WATER HEATER	A	100	1	4	2.5	0.4	61009	C	20	10	30	1.09	-	-	-	0.24	-	>100	> 200	250	✔	0.41	8.7	✔	N/A
9L1	1ST FLOOR KITCHEN	A	100	7	4	2.5	0.4	61009	C	32	10	30	0.68	-	-	-	0.19	-	>100	> 200	250	✔	0.36	8.9	✔	N/A
9L2	CLASS C RING	A	100	-	4	2.5	0.4	61009	C	32	10	30	0.68	0.44	0.44	1.23	0.12	-	>100	> 200	250	✔	0.29	8.4	✔	N/A
10 L1	RECEPTION SOCKETS	A	100	3	4	2.5	0.4	61009	C	32	10	30	0.68	0.27	0.27	0.72	0.27	-	>100	> 200	250	✔	0.44	11.7	✔	N/A
10 L2	1ST FLOOR KITCHEN	A	100	4	4	2.5	0.4	61009	C	32	10	30	0.68	0.27	0.29	0.77	0.05	-	>100	> 200	250	✔	0.22	8.6	✔	N/A
10 L3	LIFT	A	100	1	4	2.5	0.4	61009	C	20	10	30	1.09	-	-	-	0.19	-	>100	> 200	250	✔	0.36	8.4	✔	N/A
11 L1	COMMS CAB	A	100	1	4	2.5	0.4	61009	C	20	10	30	1.09	-	-	-	0.24	-	>100	> 200	250	✔	0.41	8.4	✔	N/A
11 L2	AC SPURS & SHUTTERS	A	100	7	4	2.5	0.4	61009	C	20	10	30	1.09	-	-	-	0.22	-	>100	> 200	250	✔	0.61	8.4	✔	N/A
11 L3	SPARE																									
12 L1	COMMS RING	A	100	4	4	2.5	0.4	61009	C	32	10	30	0.68	0.33	0.33	0.93	0.12	-	>100	> 200	250	✔	0.29	8.4	✔	N/A
12 L2	CLASS A RING	A	100	6	4	2.5	0.4	61009	C	32	10	30	0.68	0.48	0.48	2.13	0.30	-	>100	> 200	250	✔	0.47	8.4	✔	N/A
12 L3	LUNCH AREA RING	A	100	-	4	2.5	0.4	61009	C	32	10	30	0.68	0.18	0.17	0.52	0.04	-	>100	> 200	250	✔	0.21	8.5	✔	N/A
13 L1	CLEANERS 1ST FLOOR	A	100	3	4	2.5	0.4	61009	C	20	10	30	1.09	-	-	-	0.47	-	>100	> 200	250	✔	0.64	8.4	✔	N/A
13 L2	CLEANERS GROUND FLOOR	A	100	2	4	2.5	0.4	61009	C	20	10	30	1.09	-	-	-	0.08	-	>100	> 200	250	✔	0.25	8.6	✔	N/A
13 L3	UNDER MEZ PILLAR SOCKETS	A	100	8	4	2.5	0.4	61009	C	32	10	30	0.68	0.48	0.47	1.25	0.23	-	>100	> 200	250	✔	0.40	12.1	✔	N/A
14 L1	KITCHEN RING GROUND FLOOR	A	100	4	4	2.5	0.4	61009	C	32	10	30	0.68	0.24	0.24	0.64	0.06	-	>100	> 200	250	✔	0.23	8.4	✔	N/A
14 L2	SOCKETS FAR OFFICES	A	100	-	4	2.5	0.4	61009	C	32	10	30	0.68	0.42	0.42	1.17	0.20	-	>100	> 200	250	✔	0.37	8.6	✔	N/A
14 L3	MEETING ROOM GROUND FLOOR	A	100	-	4	2.5	0.4	61009	C	32	10	30	0.68	0.42	0.43	1.15	0.10	-	>100	> 200	250	✔	0.27	8.6	✔	N/A

CODES FOR TYPE OF WIRING	A	B	C	D	E	F	G	H	O - Other
	Thermoplastic insulated/sheathed cables	Thermoplastic cables in metallic conduit	Thermoplastic cables in nonmetallic conduit	Thermoplastic cables in metallic trunking	Thermoplastic cables in nonmetallic trunking	Thermoplastic /SWA cables	Thermosetting /SWA cables	Mineral insulated cables	N/A

SCHEDULE OF CIRCUIT DETAILS AND TEST RESULTS

Distribution board designation: DB3 Location: WAREHOUSE

Circuit number and phase	Circuit designation	Type of wiring	Reference Method	Number of points served	Circuit conductors: csa Live mm²	Circuit conductors: csa cpc mm²	Max disconnect time permitted by BS7671 s	Overcurrent protective devices BS(EN)	Type No	Rating A	Capacity kA	RCD Operating current, IΔn mA	Maximum Z_s permitted by BS7671 Ω	Circuit impedances (Ohms) Ring final circuits only (measured end to end) r_1 (Line)	r_n (Neutral)	r_2 (cpc)	All circuits (one column to be completed) R_1+R_2	R_2	Insulation resistance Live - Live MΩ	Live - Earth MΩ	Test voltage V	Polarity ✔	Maximum measured earth fault loop impedance Zs Ω	RCD Disconnection time ms	RCD Test button operation ✔	AFDD Test button operation ✔
1 L1	AC	O	E	1	10	10	0.4	60898	C	32	10	10	0.68	-	-	-	0.05	-	>100	>100	250	✔	0.10	-	N/A	N/A
1 L2	AC	O	E	1	10	10	0.4	60898	C	32	10	10	0.68	-	-	-	0.05	-	>100	>100	250	✔	0.10	-	N/A	N/A
1 L3	AC	O	E	1	10	10	0.4	60898	C	32	10	10	0.68	-	-	-	0.05	-	>100	>100	250	✔	0.10	-	N/A	N/A
2 L1	AC	O	E	1	10	10	0.4	60898	C	32	10	10	0.68	-	-	-	0.05	-	>100	>100	250	✔	0.10	-	N/A	N/A
2 L2	AC	O	E	1	10	10	0.4	60898	C	32	10	10	0.68	-	-	-	0.05	-	>100	>100	250	✔	0.10	-	N/A	N/A
2 L3	AC	O	E	1	10	10	0.4	60898	C	32	10	10	0.68	-	-	-	0.05	-	>100	>100	250	✔	0.10	-	N/A	N/A
3 L1	AC	O	E	1	10	10	0.4	60898	C	32	10	10	0.68	-	-	-	0.06	-	>100	>100	250	✔	0.11	-	N/A	N/A
3 L2	AC	O	E	1	10	10	0.4	60898	C	32	10	10	0.68	-	-	-	0.06	-	>100	>100	250	✔	0.11	-	N/A	N/A
3 L3	AC	O	E	1	10	10	0.4	60898	C	32	10	10	0.68	-	-	-	0.06	-	>100	>100	250	✔	0.11	-	N/A	N/A
4 L1	LIFT	O	E	1	4	4	0.4	60898	C	16	10	10	1.37	-	-	-	0.16	-	>100	>100	250	✔	0.21	-	N/A	N/A
4 L2	LIFT	O	E	1	4	4	0.4	60898	C	16	10	10	1.37	-	-	-	0.16	-	>100	>100	250	✔	0.21	-	N/A	N/A

CODES FOR TYPE OF WIRING	A Thermoplastic insulated/sheathed cables	B Thermoplastic cables in metallic conduit	C Thermoplastic cables in nonmetallic conduit	D Thermoplastic cables in metallic trunking	E Thermoplastic cables in nonmetallic trunking	F Thermoplastic /SWA cables	G Thermosetting /SWA cables	H Mineral insulated cables	O - Other
									N/A

BOARD CHARACTERISTICS

APPLIES WHEN THE BOARD IS NOT CONNECTED TO THE ORIGIN OF THE INSTALLATION

Supply to this distribution board is from: MAIN MCCB PANEL No of phases: 3 Confirmation of supply polarity:

Overcurrent protective device for the distribution circuit: BS(EN): 60947-2 Rating: 100 A Nominal Voltage: 400 V Zs: 0.05 Ω Ipf: 8.6 kA

RCD BS(EN): No of poles: 3 Rating: mA Disconnection time at In: ms Disconnection time at 5In: ms

DETAILS OF TEST INSTRUMENTS

Details of Test Instruments used (state serial and/or asset numbers):

Multi-functional: 3270047 Insulation resistance: - Continuity: -

Earth electrode resistance: - Earth fault loop impedance: - RCD: -

TESTED BY

Name: NAME Position: Electrician Signature: SIGNATURE Date: 29/07/2022

SCHEDULE OF CIRCUIT DETAILS AND TEST RESULTS

Distribution board designation: DB3 Location: WAREHOUSE

Circuit number and phase	Circuit designation	Type of wiring	Reference Method	Number of points served	Circuit conductors: csa		Max disconnect time permitted by BS7671	Overcurrent protective devices				RCD	Maximum Z_s permitted by BS7671	Circuit impedances (Ohms)					Insulation resistance			Polarity	Maximum measured earth fault loop impedance Zs	RCD		AFDD
					Live	cpc		BS(EN)	Type No	Rating	Capacity	Operating current, $I\Delta n$		Ring final circuits only (measured end to end)			All circuits (one column to be completed)		Live - Live	Live - Earth	Test voltage			Disconnection time	Test button operation	Test button operation
														r_1	r_n	r_2	R_1+R_2	R_2								
					mm²	mm²	s			A	kA	mA	Ω	(Line)	(Neutral)	(cpc)			MΩ	MΩ	V	✔	Ω	ms	✔	✔
4 L3	LIFT	O	E	1	4	4	0.4	60898	C	16	10	10	1.37	-	-	-	0.16	-	>100	>100	250	✔	0.21	-	N/A	N/A
5 L1	LIFT	O	E	1	4	4	0.4	60898	C	16	10	10	1.37	-	-	-	0.18	-	>100	>100	250	✔	0.23	-	N/A	N/A
5 L2	LIFT	O	E	1	4	4	0.4	60898	C	16	10	10	1.37	-	-	-	0.18	-	>100	>100	250	✔	0.23	-	N/A	N/A
5 L3	LIFT	O	E	1	4	4	0.4	60898	C	16	10	10	1.37	-	-	-	0.18	-	>100	>100	250	✔	0.23	-	N/A	N/A
6 L1	COMPRESSOR	O	E	1	4	4	0.4	60898	C	16	10	10	1.37	-	-	-	0.02	-	>100	>100	250	✔	0.07	-	N/A	N/A
6 L2	COMPRESSOR	O	E	1	4	4	0.4	60898	C	16	10	10	1.37	-	-	-	0.02	-	>100	>100	250	✔	0.07	-	N/A	N/A
6 L3	COMPRESSOR	O	E	1	4	4	0.4	60898	C	16	10	10	1.37	-	-	-	0.02	-	>100	>100	250	✔	0.07	-	N/A	N/A
7 L1	EXHAUST	O	E	1	4	4	0.4	60898	C	20	10	10	1.09	-	-	-	0.02	-	>100	>100	250	✔	0.07	-	N/A	N/A
7 L2	EXHAUST	O	E	1	4	4	0.4	60898	C	20	10	10	1.09	-	-	-	0.02	-	>100	>100	250	✔	0.07	-	N/A	N/A
7 L3	EXHAUST	O	E	1	4	4	0.4	60898	C	20	10	10	1.09	-	-	-	0.02	-	>100	>100	250	✔	0.07	-	N/A	N/A
10 L1	AC	O	E	1	4	4	0.4	60898	C	32	10	10	0.68	-	-	-	0.04	-	>100	>100	250	✔	0.09	-	N/A	N/A
10 L2	AC	O	E	1	4	4	0.4	60898	C	16	10	10	1.37	-	-	-	0.04	-	>100	>100	250	✔	0.09	-	N/A	N/A
10 L3	AC	O	E	1	4	4	0.4	60898	C	16	10	10	1.37	-	-	-	0.20	-	>100	>100	250	✔	0.25	-	N/A	N/A
11 L1	AC	O	E	1	4	4	0.4	60898	C	16	10	10	1.37	-	-	-	0.12	-	>100	>100	250	✔	0.17	-	N/A	N/A
11 L2	AC	O	E	1	4	4	0.4	60898	C	16	10	10	1.37	-	-	-	0.12	-	>100	>100	250	✔	0.17	-	N/A	N/A
11 L3	AC	O	E	1	4	4	0.4	60898	C	16	10	10	1.37	-	-	-	0.14	-	>100	>100	250	✔	0.19	-	N/A	N/A
12 L1	AC	O	E	1	4	4	0.4	60898	C	10	10	10	2.19	-	-	-	0.14	-	>100	>100	250	✔	0.19	-	N/A	N/A
12 L2	AC	O	E	1	4	4	0.4	60898	C	10	10	10	2.19	-	-	-	0.13	-	>100	>100	250	✔	0.18	-	N/A	N/A
12 L3	AC	O	E	1	4	4	0.4	60898	C	10	10	10	2.19	-	-	-	0.13	-	>100	>100	250	✔	0.18	-	N/A	N/A
13 L3	RING MAIN	O	E	-	4	4	0.4	60898	C	32	10	10	0.68	-	-	-	-	-	>100	>100	250	✔	-	-	N/A	N/A
14																										

CODES FOR TYPE OF WIRING	A	B	C	D	E	F	G	H	O - Other
	Thermoplastic insulated/sheathed cables	Thermoplastic cables in metallic conduit	Thermoplastic cables in nonmetallic conduit	Thermoplastic cables in metallic trunking	Thermoplastic cables in nonmetallic trunking	Thermoplastic /SWA cables	Thermosetting /SWA cables	Mineral insulated cables	N/A

ELECTRICAL INSTALLATION CERTIFICATE
GUIDANCE FOR RECIPIENTS

(to be appended to the Certificate)

This safety Certificate has been issued to confirm that the electrical installation work to which it relates has been designed, constructed and inspected and tested in accordance with British Standard 7671 (as amended) (The IET Wiring Regulations).

You should have received an original Certificate and the contractor should have retained a duplicate Certificate. If you were the person ordering the work, but not the user of the installation, you should pass this Certificate, or a full copy of it including the schedules, immediately to the user.

The 'original' Certificate should be retained in a safe place and be shown to any person inspecting or undertaking further work on the electrical installation in the future. If you later vacate the property, this Certificate will demonstrate to the new owner that the electrical installation complied with the requirements of British Standard 7671 at the time the certificate was issued. The Construction (Design and Management) Regulations require that for a project covered by those regulations, a copy of this Certificate, together with schedules is included in the project health and safety documentation.

For safety reasons, the electrical installation will need to be inspected at appropriate intervals by a competent person. The maximum time interval recommended before the next inspection it stated on Page 1 under 'Next Inspection'.

This Certificate is intended to be issued only for a new electrical installation or new new work associated with an alteration or addition to an existing installation. It should not have been issued for the inspection of an existing electrical installation. An 'Electrical Installation Condition Report' should be issued for such an inspection.

This Certificate is only valid if a Schedule of Inspections and Schedule of Test Results are appended.

SAMPLE

5. Test & Commissioning Certificates

5.05

Emergency Lighting Certificate

Source file: Emergency Lighting Certificate.pdf

SAMPLE

EMERGENCY LIGHTING COMPLETION CERTIFICATE FOR SMALL NEW INSTALLATIONS

For Small New Installations up to 25 self-contained luminaires

Certificate Reference: REF

1 DETAILS OF THE CLIENT

Client: CLIENT

Address: ADDRESS

2 DETAILS OF THE EMERGENCY LIGHTING INSTALLATION

Installation Address: ADDRESS

Extent of the installation covered by this certificate: New Installation of emergency lighting to SITE

The installation is: New ✔ An addition N/A An alteration N/A

3 DETAILS OF DEVIATIONS FROM THE STANDARD

Declaration (Design, Installation or Verification)	Clause number	Details of Deviations

4 RELATED REFERENCE DOCUMENTS

This Certificate is only valid when accompanied by current:

a) Signed declaration.

b) Photometric design data. This can be in any of the following formats but in all cases appropriate de-rating factors must be used and identified to meet worst case requirements.

- Authenticated spacing data such as ICEL 1001 registered tables.
- Calculations as detailed in BS 5266-1:2016, Annex D, and CIBSE/SLL Guide LG12.
- Appropriate computer print-out of results.

c) Test log book.

Essential related reference documents:

5 NEXT INSPECTION

I/We, the designer, RECOMMEND that this installation is further inspected and tested after an interval of not more than: 10 Years or change of tenant/owner

Enter interval in accordance with Clause 6.2 of BS EN 50172: 2004 / BS 5266-8: 2004

6 DECLARATION OF CONFORMITY

In consequence of acceptance of the appended declaration, I/we hereby declare that the emergency lighting system installation, or part thereof, at the above premises conforms, to the best of my/our knowledge and belief, to the appropriate recommendations given in BS 5266-1:2016, Emergency lighting - Part 1: Code of practice for the emergency lighting of premises, BS EN 1838:2013 Lighting applications - Emergency lighting and BS EN 50172:2004, Emergency escape lighting , as set out in the accompanying declarations, except as stated below/overleaf.

Name: NAME Position: Electrician Signature: SIGNATURE Date: 05/08/2022

7 DETAILS OF THE ELECTRICAL CONTRACTOR

Trading Title: INSTALLER

Address: ADDRESS ADDRESS ADDRESS

Postcode: ADDRESS

Registration Number (if applicable): REG NO.

Telephone Number: CONTACT

SAMPLE

8 EMERGENCY LIGHTING COMPLIANCE CHECKLIST

BS 5266-1:2016 clause reference	Engineer Function D - Designer I - Installer V - Verifier	Check of categories and documentation	System Conforms
4.2	D, V	Are plans of the system available and correct?	Yes
6.7	D, V	Has the system been designed for the correct mode of operation category?	Yes
6.7	D, V	Has the system been designed for the correct emergency duration period?	Yes
Clause 11	D, V	Is a completion certificate available with photometric design data?	Yes
Clause 11	D, I, V	Is a test log book available and are the entries up to date?	Yes
		Check of design	
4.1; 5.2.8	D, I, V	Are the correct areas of the premises covered to meet the risk assessment?	Yes
5.2.8	D, I, V	Are all hazards identified by the risk assessment covered?	Yes
5.2.8	D, I, V	Are there luminaires sited at the "points of emphasis"?	Yes
5.2.2	D, I, V	Is the spacing between luminaires compliant with authenticated spacing or design data?	Yes
5.2.9	D, I, V	Are the emergency exit signs and escape route direction signs correct and the locations of other safety signs to be illuminated under emergency conditions identified?	Yes
6.1	D, I, V	Do all non-maintained luminaires operate on local final circuit failure?	Yes
6.3	D, V	Is there illumination from at least two luminaires in each section of the escape route?	Yes
6.4	I, V	Are luminaires at least 2 m above floor and avoiding smoke reservoirs?	Yes
5.2.8.5; 5.2.8.6	D, V	Are additional luminaires located to cover toilets, lifts, plant rooms, etc.?	
		Check of the quality of the system components and installation	
6.7	D, I, V	Do the luminaires conform to BS EN 60598-2-22?	Yes
6.7	D, I, V	Do any converted luminaires conform to BS EN 60598-2-22?	Yes
6.7	D, I, V	Do luminaires have a suitable degree of protection for their location?	Yes
Clause 8	I, V	Does the installation conform to the good practice defined in BS 7671?	Yes
8.2.12	D, I, V	Are any plugs or sockets protected against unauthorized use?	Yes
		Test facilities	
8.3.3	D, V, I	Are the test facilities suitable to test function and duration?	Yes
8.3.3	D, I, V	Are the test facilities safe to operate and do not isolate a required service?	Yes
8.3.3	D, I, V	Are the test facilities clearly marked with their function?	Yes
8.3.3	D, I, V	If an automatic test system is installed, does it conform to BS EN 62034?	Yes
10.7	D, V	Is the responsible person trained and able to operate the test facilities and record the test results correctly?	Yes
		Final acceptance to be conducted at completion	
Clause 12	D, I, V	Does the system operate correctly when tested?	Yes
10.7	D, I, V	Has adequate documentation been provided to the user?	Yes
10.7	D, I, V	Is the user aware of action they should take in the event of a test failure?	Yes

9 ACTION RECOMMENDED OR DEVIATION TO BE REPORTED

Action recommended or deviation to be reported:

SAMPLE

5. Test & Commissioning Certificates

5.06

Zone and Address Print Out

Source file: Zone and Address Print Out.pdf

SAMPLE

On-Board Brief Points Description SITE

Address	Type	Zone	Zone Text	Location
1.0	Voltage	200		Sounder A
1.1	Voltage	200		Sounder B
10.0	Switch	200		Panel Input 1
10.1	Switch	200		Panel Input 2
10.2	Switch	200		Panel Input 3
10.3	Switch	200		Panel Input 4
10.4	Switch	200		Panel Input 5
10.5	Switch	200		Panel Input 6
10.6	Switch	200		Panel Input 7
10.7	Switch	200		Panel Input 8
10.8	Switch	200		Panel Input 9
11.0	Relay	200		Relay 1
11.1	Relay	200		Relay 2
11.2	Relay	200		Relay 3
11.3	Relay	200		Relay 4
14.0	Switch	200		Main Supply

SAMPLE

Loop 1 Brief Points Description SITE

Address	Type	Zone	Zone Text	Location
1.0	Heat Detector	2	Warehouse	Warehouse High Level
2.0	Heat Detector	2	Warehouse	Warehouse High Level
3.0	Heat Detector	2	Warehouse	Warehouse High Level
4.0	Heat Detector	2	Warehouse	Warehouse High Level
5.0	Heat Detector	2	Warehouse	Warehouse High Level
6.0	Heat Detector	2	Warehouse	Warehouse High Level
7.0	Heat Detector	2	Warehouse	Digital Booth
8.0	Optical Smoke	2	Warehouse	Store Room
9.0	Optical Smoke	1	Ground Floor Offices	Cupboard
10.0	Sounder	1	Ground Floor Offices	Office 01
11.0	Optical Smoke	1	Ground Floor Offices	Office 01
12.0	Sounder	1	Ground Floor Offices	Office 02
13.0	Optical Smoke	1	Ground Floor Offices	Office 02
14.0	Optical Smoke	1	Ground Floor Offices	Corridor
15.0	Sounder	1	Ground Floor Offices	Classroom 01
16.0	Optical Smoke	1	Ground Floor Offices	Classroom 01
17.0	Sounder	1	Ground Floor Offices	Entrance Lobby
18.0	Optical Smoke	1	Ground Floor Offices	Entrance Lobby
19.0	Optical Smoke	1	Ground Floor Offices	Locker Room
20.0	Call Point	1	Ground Floor Offices	Reception
21.0	Sounder	1	Ground Floor Offices	Reception High Level
22.0	Optical Smoke	1	Ground Floor Offices	Reception High Level
23.0	Heat Detector	3	First Floor Offices	Kitchen
24.0	Optical Smoke	3	First Floor Offices	Main Staircase
25.0	Optical Smoke	3	First Floor Offices	Cleaners Cupboard
26.0	Optical Smoke	3	First Floor Offices	Storage Cupboard
27.0	Optical Smoke	3	First Floor Offices	Communications Room
28.0	Sounder	3	First Floor Offices	Office
29.0	Optical Smoke	3	First Floor Offices	Office
30.0	Heat Detector	4	First Floor Office Voids	Above Office
31.0	Call Point	3	First Floor Offices	Back Staircase
32.0	Optical Smoke	3	First Floor Offices	Breakout Area
33.0	Heat Detector	4	First Floor Office Voids	Above Breakout Area
34.0	Call Point	3	First Floor Offices	Main Staircase
35.0	Sounder	3	First Floor Offices	Breakout Area
36.0	Optical Smoke	3	First Floor Offices	Breakout Area
37.0	Heat Detector	4	First Floor Office Voids	Above Breakout Area
38.0	Sounder	3	First Floor Offices	Toilet
39.0	Sounder	3	First Floor Offices	Toilet

EXAMPLE

40.0	Sounder	3	First Floor Offices	Toilet
41.0	Sounder	3	First Floor Offices	Toilet
42.0	Sounder	3	First Floor Offices	Disabled Toilet
43.0	Sounder	3	First Floor Offices	Toilet Lobby
44.0	Heat Detector	4	First Floor Office Voids	Above Lunch Room
45.0	Sounder	3	First Floor Offices	Lunch Room
46.0	Optical Smoke	3	First Floor Offices	Lunch Room
47.0	Heat Detector	4	First Floor Office Voids	Above Classroom C
48.0	Sounder	3	First Floor Offices	Classroom C
49.0	Optical Smoke	3	First Floor Offices	Classroom C
50.0	Heat Detector	4	First Floor Office Voids	Above Classroom B
51.0	Sounder	3	First Floor Offices	Classroom B
52.0	Optical Smoke	3	First Floor Offices	Classroom B
53.0	Heat Detector	4	First Floor Office Voids	Above Classroom A
54.0	Sounder	3	First Floor Offices	Classroom A
55.0	Optical Smoke	3	First Floor Offices	Classroom A
56.0	Optical Smoke	3	First Floor Offices	Back Staircase
57.0	Sounder	1	Ground Floor Offices	Back Staircase High Level
58.0	Optical Smoke	1	Ground Floor Offices	Back Staircase High Level
59.0	Heat Detector	2	Warehouse	Undercroft Rear
60.0	Heat Detector	2	Warehouse	Undercroft Middle
61.0	Heat Detector	2	Warehouse	Undercroft Front
62.0	Call Point	1	Ground Floor Offices	Back Staircase
63.0	Sounder	1	Ground Floor Offices	Toilet
64.0	Sounder	1	Ground Floor Offices	Toilet
65.0	Sounder	1	Ground Floor Offices	Toilet Lobby
66.0	Optical Smoke	1	Ground Floor Offices	Toilet Lobby
67.0	Optical Smoke	1	Ground Floor Offices	Cleaners Cupboard
68.0	Call Point	2	Warehouse	Undercroft Front
69.0	Sounder	2	Warehouse	Undercroft Front
70.0	Switch	2	Warehouse	Fire Curtain Undercroft
70.1	Switch	2	Warehouse	
70.2	Relay	2	Warehouse	
72.0	Sounder	2	Warehouse	Undercroft Rear
73.0	Call Point	2	Warehouse	Undercroft Rear
74.0	Call Point	2	Warehouse	Warehouse Rear
75.0	Sounder	2	Warehouse	Warehouse Rear
76.0	Switch	2	Warehouse	Fire Curtain Undercroft
76.1	Switch	2	Warehouse	
76.2	Relay	2	Warehouse	
78.0	Call Point	2	Warehouse	Warehouse Front

SAMPLE

79.0	Sounder	2	Warehouse	Warehouse Front
80.0	Sounder	2	Warehouse	Warehouse
81.0	Switch	3	First Floor Offices	Fire Curtain Classroom A
81.1	Switch	3	First Floor Offices	
81.2	Relay	3	First Floor Offices	
82.0	Switch	3	First Floor Offices	Fire Curtain Classroom B
82.1	Switch	3	First Floor Offices	
82.2	Relay	3	First Floor Offices	
83.0	Switch	3	First Floor Offices	Fire Curtain Classroom C
83.1	Switch	3	First Floor Offices	
83.2	Relay	3	First Floor Offices	
84.0	Switch	3	First Floor Offices	Fire Curtain Lunch Room
84.1	Switch	3	First Floor Offices	
84.2	Relay	3	First Floor Offices	
85.0	Sounder	2	Warehouse	Warehouse
86.0	Sounder	2	Warehouse	Mains Room
87.0	Heat Detector	2	Warehouse	Mains Room

Display Card Brief Points Description SITE

Address	Type	Zone	Zone Text	Location
1.4	Push Button	200		Evacuate Key
1.8	Push Button	200		-
1.9	Push Button	200		-
1.10	Push Button	200		-
1.11	Push Button	200		-

SAMPLE

6. As-Built Drawings

Ref	Description	Source File
6.01	EX 101 CO FF 01 RA (First Floor Co ordinated Layout)	EX-101-CO-FF-01-RA (First Floor Co-ordinated Layout).pdf
6.02	EX 101 CO GF 01 RA (Ground Floor Co ordinated Layout)	EX-101-CO-GF-01-RA (Ground Floor Co-ordinated Layout).pdf
6.03	EX 101 EL FF 01 RA (First Floor Lighting Layout)	EX-101-EL-FF-01-RA (First Floor Lighting Layout).pdf
6.04	EX 101 EL FF 02 RA (First Floor Small Power Layout)	EX-101-EL-FF-02-RA (First Floor Small Power Layout).pdf
6.05	EX 101 EL GF 01 RA (Ground Floor Lighting Layout)	EX-101-EL-GF-01-RA (Ground Floor Lighting Layout).pdf
6.06	EX 101 EL GF 02 RA (Ground Floor Small Power Layout)	EX-101-EL-GF-02-RA (Ground Floor Small Power Layout).pdf
6.07	EX 101 FA FF 01 RA (First Floor Fire Alarm Drawing)	EX-101-FA-FF-01-RA (First Floor Fire Alarm Drawing).pdf
6.08	EX 101 FA GF 01 RA (Ground Floor Fire Alarm Layout)	EX-101-FA-GF-01-RA (Ground Floor Fire Alarm Layout).pdf

SAMPLE

6. As-Built Drawings

6.01

EX 101 CO FF 01 RA (First Floor Co ordinated Layout)

Source file: EX-101-CO-FF-01-RA (First Floor Co-ordinated Layout).pdf

SAMPLE

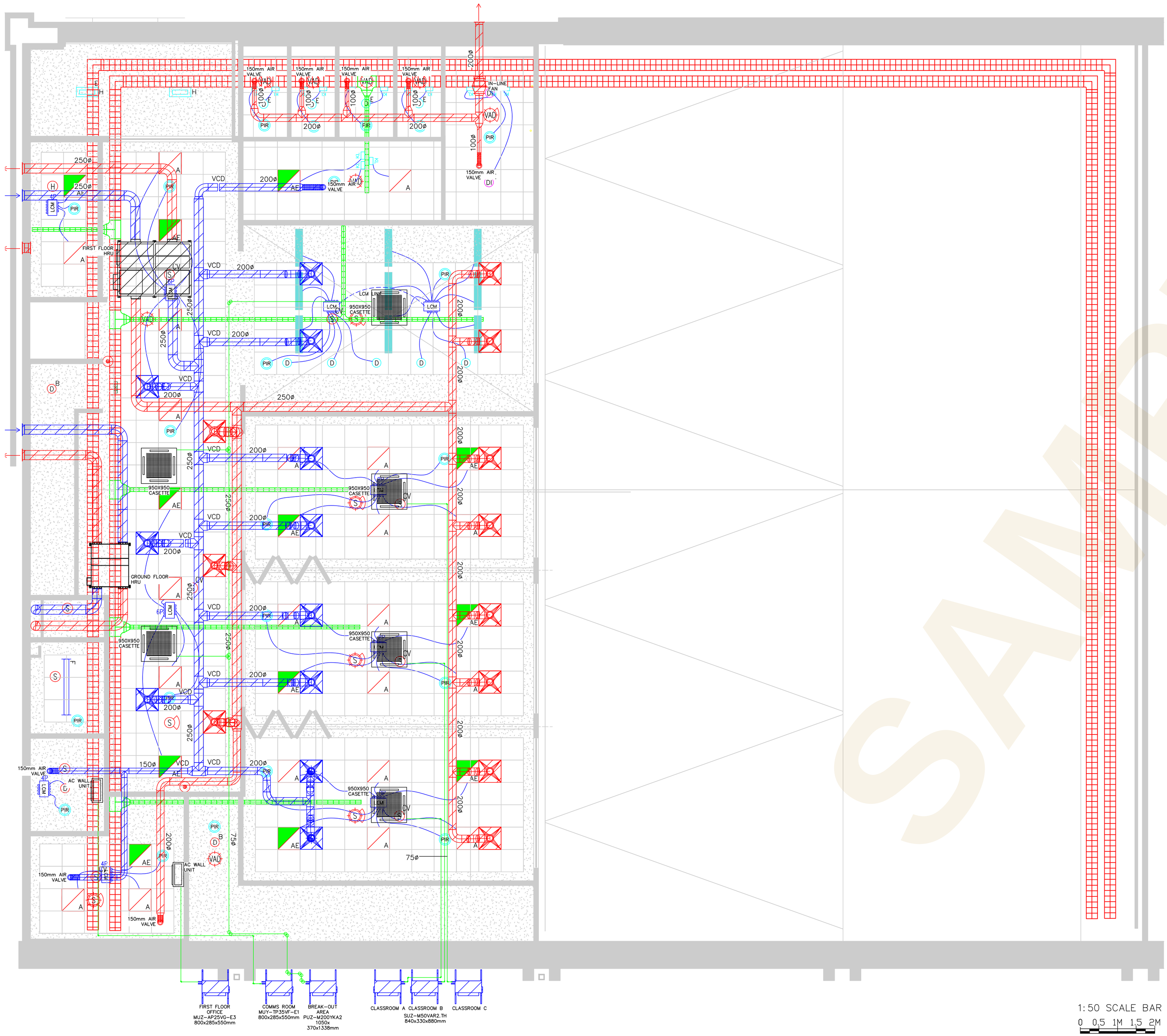

GENERAL NOTES
This drawing is to be read in conjunction with all related drawings.
Do not scale from this drawing.
All dimensions must be checked and verified on site
before commencing any work or producing shop drawings.

LIGHTING LEGEND

- A — COLLINGWOOD P2A19_30W 600X600 GRID LIGHTING
- AE — COLLINGWOOD P2A19_30W 600X600 EMERGENCY GRID LIGHTING
- D — COLLINGWOOD CDL0116
- G — COLLINGWOOD AC5T_40 1500mm
- B — COLLINGWOOD WL9530 (CEILING MOUNTED)
- C — COLLINGWOOD WL9530 (WALL MOUNTED)
- H — COLLINGWOOD LB15040
- F — COLLINGWOOD AC5S_40 1500mm
- DI — COLLINGWOOD CDL0124
- PIR — PASSIVE INFRA-RED MOTION DETECTOR.
- 1G — 1G LIGHT SWITCH
- 2G — 2G LIGHT SWITCH
- EXIT — EXIT SIGNAGE
- 300MM CABLE BASKET (1 DIVIDER)
- 100MM CABLE BASKET (1 DIVIDER)
- EXISTING CABLE BASKET
- LCM — LIGHTING LCM
- KLICK BASE PLACED ON TRAY
- EXTERNAL BULKHEAD FITTING

Rev	Date	Description	Drn	Chkd
A	12/08/22	As Built Issued		INIT.

PROJECT / CLIENT

Description.
First Floor
Co-ordinated

INITIALS

Sheet No. 1 OF 1 Rev. A

DRAWING NO.

Drawing Status.
As Built

INSTALLER

6. As-Built Drawings

6.02

EX 101 CO GF 01 RA (Ground Floor Co ordinated Layout)

Source file: EX-101-CO-GF-01-RA (Ground Floor Co-ordinated Layout).pdf

SAMPLE

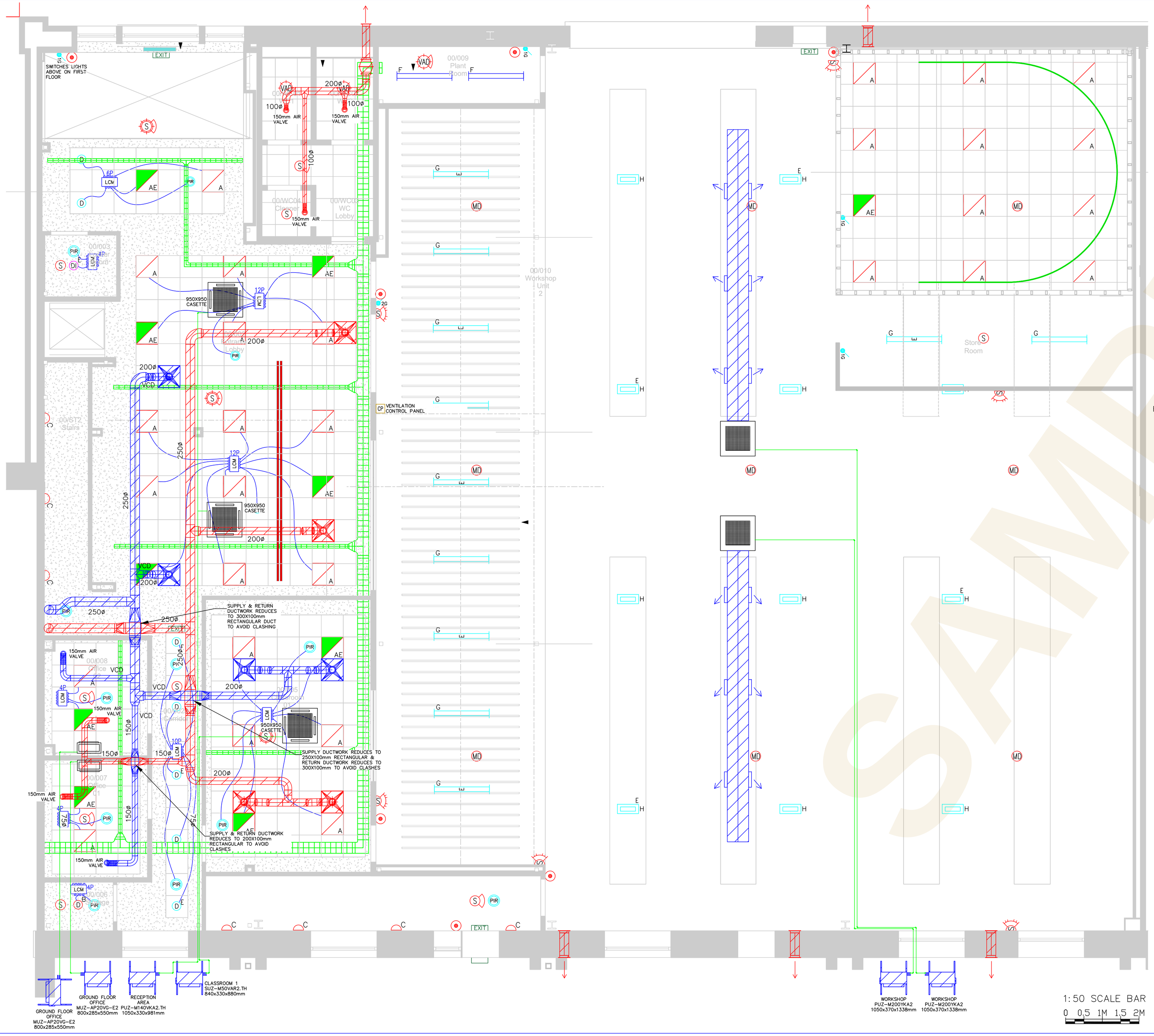

GENERAL NOTES
This drawing is to be read in conjunction with all related drawings.
Do not scale from this drawing.
All dimensions must be checked and verified on site
before commencing any work or producing shop drawings.

LIGHTING LEGEND

- COLLINGWOOD P2A19_30W 600X600 GRID LIGHTING
- COLLINGWOOD P2A19_30W 600X600 EMERGENCY GRID LIGHTING
- COLLINGWOOD CDL0116
- COLLINGWOOD AC5T_40 1500mm
- COLLINGWOOD WL9530 (CEILING MOUNTED)
- COLLINGWOOD WL9530 (WALL MOUNTED)
- COLLINGWOOD LB15040
- COLLINGWOOD AC5S_40 1500mm
- COLLINGWOOD CDL0124
- PASSIVE INFRA-RED MOTION DETECTOR.
- 1G LIGHT SWITCH
- 2G LIGHT SWITCH
- EXIT SIGNAGE
- 300MM CABLE BASKET (1 DIVIDER)
- 100MM CABLE BASKET (1 DIVIDER)
- EXISTING CABLE BASKET
- LIGHTING LCM
- KLICK BASE PLACED ON TRAY
- EXTERNAL BULKHEAD FITTING

FIRE ALARM LEGEND

- SMOKE DETECTOR
- MULTI DETECTOR
- SMOKE DETECTOR WITH SOUNDER/BEACON
- SMOKE DETECTOR WITH SOUNDER
- SMOKE DETECTOR WITH BEACON
- MANUAL CALL POINT
- VISUAL ALARM DEVICE
- VISUAL ALARM DEVICE SMOKE SOUNDER
- WALL MOUNTED SOUNDER/BEACON
- HEAT DETECTOR
- CEILING VOID DETECTOR

Rev	Date	Description	Drn	Chkd
A	12/08/22	As Built Issued		INIT.

PROJECT / CLIENT

Description.
Ground Floor
Co-ordinated

INITIALS

Sheet No. 1 OF 1 Rev. A

DRAWING NO.

Drawing Status.
As Built

INSTALLER

6. As-Built Drawings

6.03

EX 101 EL FF 01 RA (First Floor Lighting Layout)

Source file: EX-101-EL-FF-01-RA (First Floor Lighting Layout).pdf

SAMPLE

GENERAL NOTES
This drawing is to be read in conjunction with all related drawings.
Do not scale from this drawing.
All dimensions must be checked and verified on site
before commencing any work or producing shop drawings.

LIGHTING LEGEND

- A — COLLINGWOOD P2A19_30W 600X600 GRID LIGHTING
- AE — COLLINGWOOD P2A19_30W 600X600 EMERGENCY GRID LIGHTING
- D — COLLINGWOOD CDL0116
- G — COLLINGWOOD AC5T_40 1500mm
- B — COLLINGWOOD WL9530 (CEILING MOUNTED)
- C — COLLINGWOOD WL9530 (WALL MOUNTED)
- H — COLLINGWOOD LB15040
- F — COLLINGWOOD AC5S_40 1500mm
- DI — COLLINGWOOD CDL0124
- PIR — PASSIVE INFRA-RED MOTION DETECTOR.
- 1G — 1G LIGHT SWITCH
- 2G — 2G LIGHT SWITCH
- EXIT — EXIT SIGNAGE
- 300MM CABLE BASKET (1 DIVIDER)
- 100MM CABLE BASKET (1 DIVIDER)
- EXISTING CABLE BASKET
- LCM — LIGHTING LCM
- KLICK BASE PLACED ON TRAY
- EXTERNAL BULKHEAD FITTING

1:50 SCALE BAR
0 0.5 1M 1.5 2M

Rev	Date	Description	Dm	Chkd
A	12/08/22	As Built Issued		INIT.

PROJECT / CLIENT

Description.
First Floor
Lighting Layout

INITIALS

Sheet No. 1 OF 1 Rev. A

DRAWING NO

Drawing Status.
As Built

INSTALLER

6. As-Built Drawings

6.04

EX 101 EL FF 02 RA (First Floor Small Power Layout)

Source file: EX-101-EL-FF-02-RA (First Floor Small Power Layout).pdf

SAMPLE

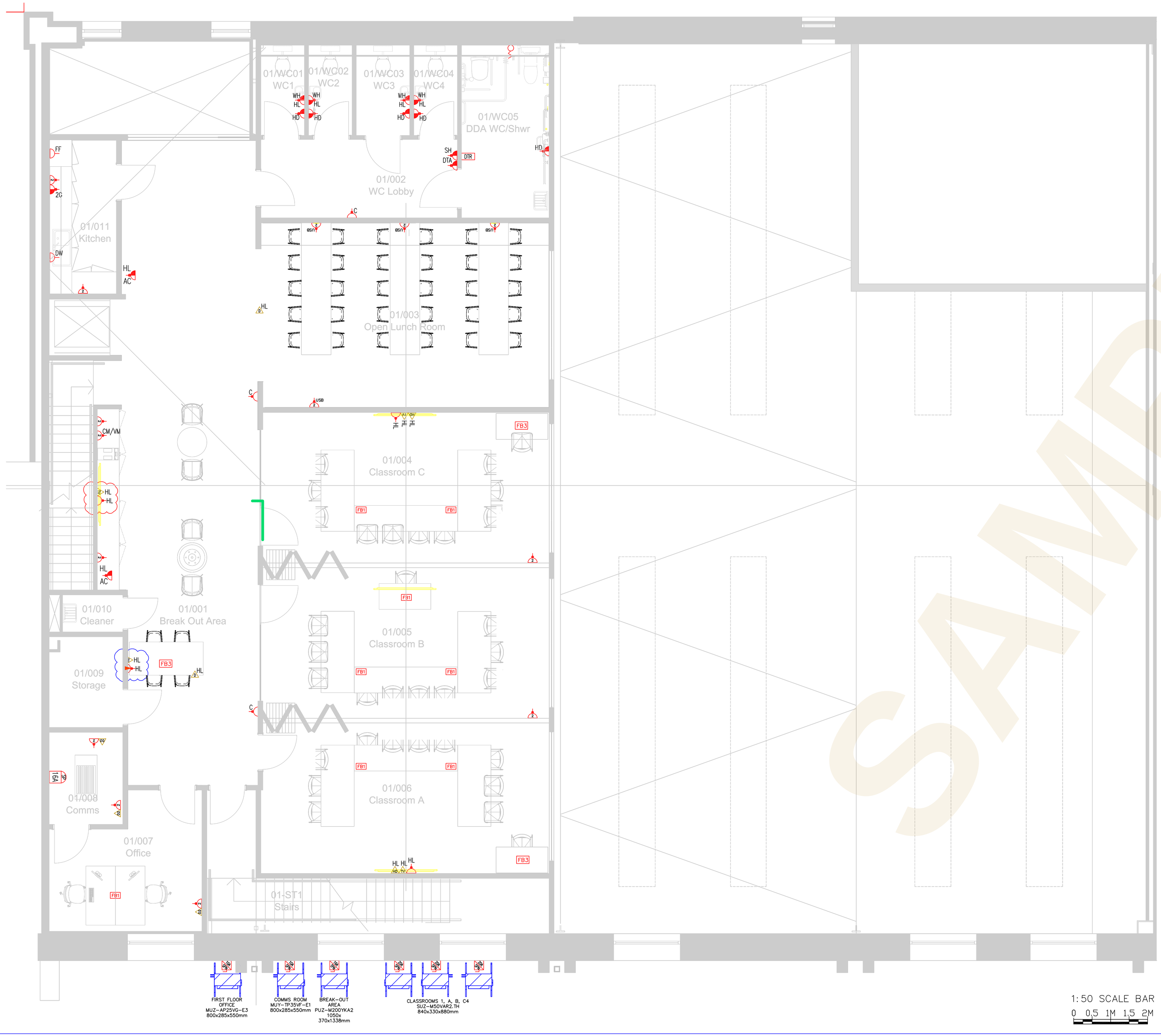

GENERAL NOTES
This drawing is to be read in conjunction with all related drawings.
Do not scale from this drawing.
All dimensions must be checked and verified on site
before commencing any work or producing shop drawings.

SMALL POWER LEGEND

- TWIN SWITCHED SOCKET
- TWIN SWITCHED SOCKET WITH USB
- TV POINT
- DOUBLE DATA POINT
- SINGLE SWITCHED SOCKET
- IP65 TWIN SWITCHED SOCKET
- DADO TRUNKING
- SWITCHED FUSED CONNECTION UNIT
- 16A TP&N ISOLATOR
- HDMI POINT
- 3 COMP METAL TRUNKING
- DATA POINT FOR WIRELESS ACCESS POINT HIGH LEVEL
- DISTRIBUTION BOARD
- PH PANEL HEATER
- ODH OVER DOOR HEATER

Rev	Date	Description	Dm	Chkd
A	12/08/22	As Built Issued		INIT.

PROJECT/ CLIENT

Description.
First Floor
Small Power Layout

INITIALS

Sheet No. 1 OF 1 Rev. A

DRAWING NO.

Drawing Status.
As Built

INSTALLER

6. As-Built Drawings

6.05

EX 101 EL GF 01 RA (Ground Floor Lighting Layout)

Source file: EX-101-EL-GF-01-RA (Ground Floor Lighting Layout).pdf

SAMPLE

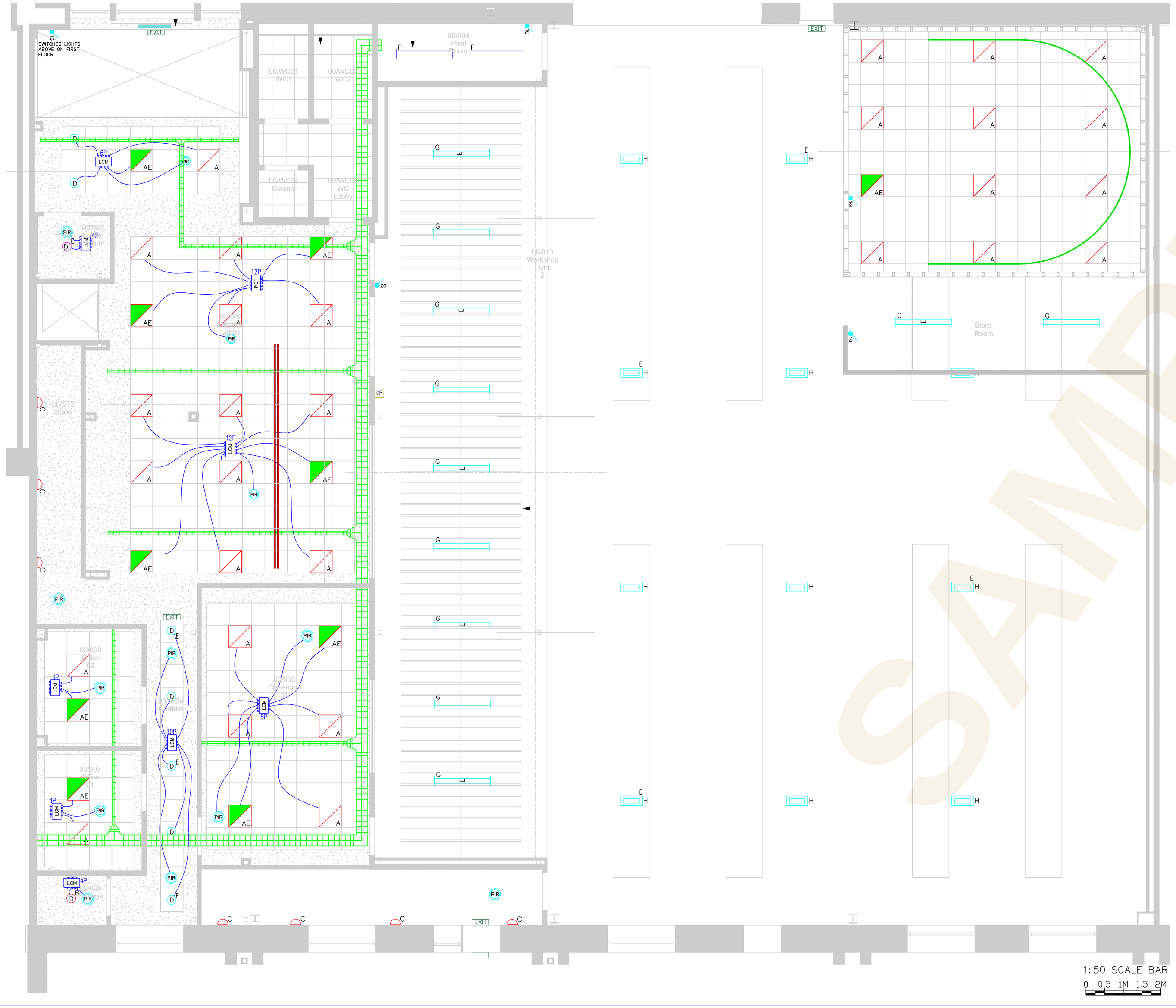

GENERAL NOTES
This drawing is to be read in conjunction with all related drawings.
Do not scale from this drawing.
All dimensions must be checked and verified on site
before commencing any work or producing shop drawings.

LIGHTING LEGEND

- A — COLLINGWOOD P2A19_30W 600X600 GRID LIGHTING
- AE — COLLINGWOOD P2A19_30W 600X600 EMERGENCY GRID LIGHTING
- D — COLLINGWOOD CDL0116
- E — COLLINGWOOD AC5T_40 1500mm
- B — COLLINGWOOD WL9530 (CEILING MOUNTED)
- C — COLLINGWOOD WL9530 (WALL MOUNTED)
- H — COLLINGWOOD LB15040
- F — COLLINGWOOD AC5S_40 1500mm
- DI — COLLINGWOOD CDL0124
- PIR — PASSIVE INFRA-RED MOTION DETECTOR.
- 1G — 1G LIGHT SWITCH
- 2G — 2G LIGHT SWITCH
- EXIT — EXIT SIGNAGE
- 300MM CABLE BASKET (1 DIVIDER)
- 100MM CABLE BASKET (1 DIVIDER)
- EXISTING CABLE BASKET
- LCM — LIGHTING LCM
- KLICK BASE PLACED ON TRAY
- EXTERNAL BULKHEAD FITTING

Rev	Date	Description	Dm	Chkd
A	12/08/22	As Built Issued		INIT.

PROJECT / CLIENT

Description.
Ground Floor
Lighting Layout

INITIALS

Sheet No. 1 OF 1 Rev. A

DRAWING NO.

Drawing Status.
As Built

INSTALLER

6. As-Built Drawings

6.06

EX 101 EL GF 02 RA (Ground Floor Small Power Layout)

Source file: EX-101-EL-GF-02-RA (Ground Floor Small Power Layout).pdf

SAMPLE

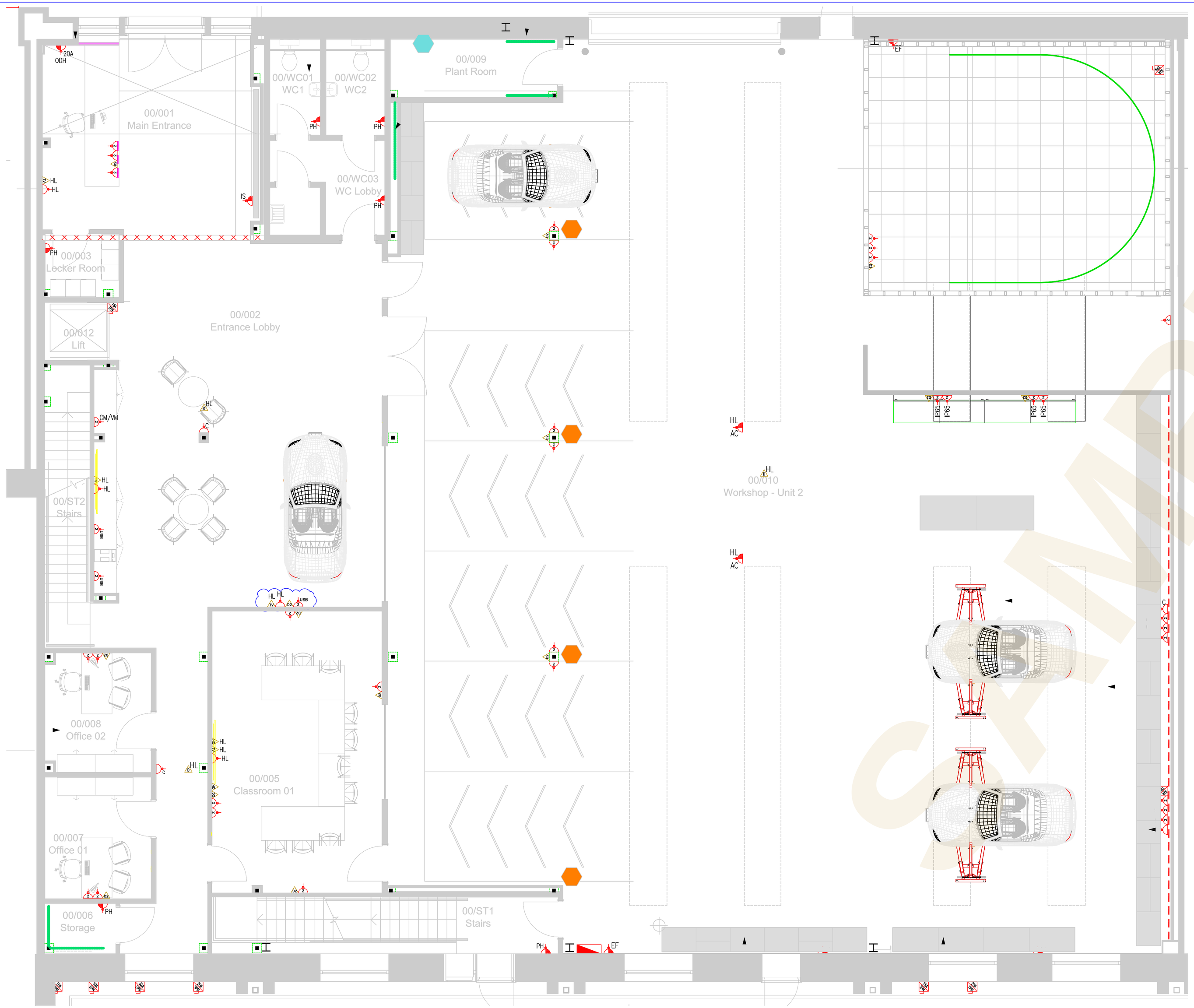

GENERAL NOTES
This drawing is to be read in conjunction with all related drawings.
Do not scale from this drawing.
All dimensions must be checked and verified on site
before commencing any work or producing shop drawings.

SMALL POWER LEGEND

- TWIN SWITCHED SOCKET
- TWIN SWITCHED SOCKET WITH USB
- TV POINT
- DOUBLE DATA POINT
- SINGLE SWITCHED SOCKET
- IP65 TWIN SWITCHED SOCKET
- DADO TRUNKING
- SWITCHED FUSED CONNECTION UNIT
- 16A TP&N ISOLATOR
- HDMI POINT
- 3 COMP METAL TRUNKING
- DATA POINT FOR WIRELESS ACCESS POINT HIGH LEVEL
- DISTRIBUTION BOARD
- PH PANEL HEATER
- ODH OVER DOOR HEATER

1:50 SCALE BAR
0 0.5 1M 1.5 2M

Rev	Date	Description	Drn	Chkd
A	12/08/22	As Built Issued		INIT.

PROJECT / CLIENT

Description.
Ground Floor
Small Power Layout

INITIALS

Sheet No. 1 OF 1 Rev. A

DRAWING NO.

Drawing Status.
As Built

INSTALLER

6. As-Built Drawings

6.07

EX 101 FA FF 01 RA (First Floor Fire Alarm Drawing)

Source file: EX-101-FA-FF-01-RA (First Floor Fire Alarm Drawing).pdf

SAMPLE

GENERAL NOTES
This drawing is to be read in conjunction with all related drawings.
Do not scale from this drawing.
All dimensions must be checked and verified on site
before commencing any work or producing shop drawings.

FIRE ALARM LEGEND

- S — SMOKE DETECTOR
- MD — MULTI DETECTOR
- S — SMOKE DETECTOR WITH SOUNDER/BEACON
- S — SMOKE DETECTOR WITH SOUNDER
- S — SMOKE DETECTOR WITH BEACON
- MANUAL CALL POINT
- VAD — VISUAL ALARM DEVICE
- VAD — VISUAL ALARM DEVICE SMOKE SOUNDER
- S — WALL MOUNTED SOUNDER/BEACON
- H — HEAT DETECTOR
- CV S — CEILING VOID DETECTOR

1:50 SCALE BAR
0 0.5 1M 1.5 2M

Rev	Date	Description	Drn	Chkd
A	10/08/22	As Built Issued	INIT.	

PROJECT / CLIENT

Description.
First Floor
Fire Alarm Layout

INITIALS

Sheet No. 1 OF 1 Rev. A

DRAWING NO.

Drawing Status.
As Built

INSTALLER

SAMPLE

6. As-Built Drawings

6.08

EX 101 FA GF 01 RA (Ground Floor Fire Alarm Layout)

Source file: EX-101-FA-GF-01-RA (Ground Floor Fire Alarm Layout).pdf

SAMPLE

GENERAL NOTES
This drawing is to be read in conjunction with all related drawings.
Do not scale from this drawing.
All dimensions must be checked and verified on site
before commencing any work or producing shop drawings.

FIRE ALARM LEGEND

- S — SMOKE DETECTOR
- MD — MULTI DETECTOR
- S — SMOKE DETECTOR WITH SOUNDER/BEACON
- S — SMOKE DETECTOR WITH SOUNDER
- S — SMOKE DETECTOR WITH BEACON
- MANUAL CALL POINT
- VAD — VISUAL ALARM DEVICE
- VAD — VISUAL ALARM DEVICE SMOKE SOUNDER
- S — WALL MOUNTED SOUNDER/BEACON
- H — HEAT DETECTOR
- CV S — SMOKE DETECTOR

00/009 Plant Room
00/WC01 WC1
00/WC02 WC2
00/WC04 Cleaner
00/WC03 WC Lobby
00/003 Locker Room
00/002 Entrance Lobby
00/ST2 Stairs
00/010 Workshop Unit 2
Store Room
00/008 Office 02
00/002a Corridor
00/005 Classroom 01
00/007 Office 01
00/006 Storage
CP

1:50 SCALE BAR
0 0.5 1M 1.5 2M

Rev	Date	Description	Drn	Chkd
A	10/08/22	As Built Issued	INT.	

PROJECT / CLIENT

Description.
Ground Floor
Fire Alarm Layout

INITIALS

Sheet No. 1 OF 1 Rev. B

DRAWING NO.

Drawing Status.
As Built

INSTALLER

SAMPLE